Game Manual 8
1 Introduction 8
1.1 What is the FIRST Robotics Competition (aka FRC)? 8
1.2 Gracious Professionalism, A FIRST Credo 9
1.3 Prominent FRC Awards 9
1.3.1 The Chairman's Award 9
1.3.2 The Woodie Flowers Award 10
1.4 Safety: A FIRST Culture 11
1.5 Robot Design and Build Schedule 11
1.6 ULTIMATE ASCENT Summary 12
2 The Arena 13
2.1 Overview 13
2.2 The ARENA 14
2.2.1 The FIELD 14
2.2.2 FIELD Markings 15
2.2.3 The GOALS 16
2.2.4 The VISION TARGETS 17
2.2.5 The PYRAMIDS 18
2.2.6 The ALLIANCE STATIONS 21
2.2.7 The FEEDER STATIONS 21
2.2.8 The PLAYER STATIONS 22
2.2.9 The Netting 23
2.2.10 The DISCS 23
2.3 Revision History 24
3 The Game 24
3.1 Game Details 24
3.1.1 MATCH Setup 24
3.1.2 MATCH Timing 25
3.1.3 MATCH Logistics 25
3.1.4 Penalty Assignment 26
3.1.5 Scoring 26
3.1.5.1 DISC Points 26
3.1.5.2 CLIMB Points 27
3.2 Game Rules 29
3.2.1 Safety 29
3.2.1.1 G01 29
3.2.1.2 G02 29

3.2.1.3 G03 29
3.2.1.4 G04 29
3.2.2 Pre-MATCH 30
3.2.2.1 G05 30
3.2.2.2 G06 30
3.2.2.3 G07 30
3.2.2.4 G08 31
3.2.2.5 G09 31
3.2.3 General Rules 31
3.2.3.1 G10 31
3.2.3.2 G11 31
3.2.3.3 G12 32
3.2.3.4 G13 32
3.2.3.5 G14 32
3.2.3.6 G15 32
3.2.3.7 G16 33
3.2.3.8 G17 33
3.2.3.9 G18 33
3.2.3.10 G18-1 33
3.2.4 AUTO Rules 33
3.2.4.1 G19 33
3.2.4.2 G20 33
3.2.4.3 G21 34
3.2.5 ROBOT Actions 34
3.2.5.1 G22 34
3.2.5.2 G23 34
3.2.5.3 G24 35
3.2.5.4 G25 35
3.2.5.5 G26 36
3.2.5.6 G27 36
3.2.6 ROBOT-ROBOT Interaction 36
3.2.6.1 G28 36
3.2.6.2 G29 36
3.2.6.3 G30 37
3.2.6.4 G31 37
3.2.6.5 G32 37
3.2.6.6 G33 38
3.2.7 Human Actions 38
3.2.7.1 G34 38

3.2.7.2 G35 38
3.2.7.3 G36 38
3.2.7.4 G37 38
3.2.7.5 G38 39
3.3 Revision History 39
4 The Robot 39
4.1 ROBOT Rules 39
4.1.1 General ROBOT Design 40
4.1.1.1 R01 40
4.1.1.2 R02 40
4.1.1.3 R03 41
4.1.1.4 R04 41
4.1.1.5 R05 41
4.1.1.6 R06 42
4.1.1.7 R07 42
4.1.2 Safety & Damage Prevention 42
4.1.2.1 R08 42
4.1.2.2 R09 43
4.1.2.3 R10 43
4.1.3 Budget Constraints 43
4.1.3.1 R11 43
4.1.3.2 R12 44
4.1.3.3 R13 44
4.1.3.4 R14 44
4.1.3.5 R15 45
4.1.4 Fabrication Schedule 45
4.1.4.1 R16 45
4.1.4.2 R17 46
4.1.4.3 R18 46
4.1.5 Material Utilization 47
4.1.5.1 R19 47
4.1.5.2 R20 47
4.1.5.3 R21 47
4.1.6 BUMPER Rules 47
4.1.6.1 R22 47
4.1.6.2 R23 48
4.1.6.3 R24 48
4.1.6.4 R25 50
4.1.6.5 R26 50

4.1.6.6 R27 50
4.1.6.7 R28 51
4.1.6.8 R29 51
4.1.6.9 R30 52
4.1.6.10 R31 52
4.1.7 Motors & Actuators 53
4.1.7.1 R32 53
4.1.7.2 R33 54
4.1.8 Power Distribution 55
4.1.8.1 R34 55
4.1.8.2 R35 55
4.1.8.3 R36 55
4.1.8.4 R37 55
4.1.8.5 R38 55
4.1.8.6 R39 56
4.1.8.7 R40 56
4.1.8.8 R41 56
4.1.8.9 R42 57
4.1.8.10 R43 57
4.1.8.11 R44 57
4.1.8.12 R45 58
4.1.8.13 R46 58
4.1.8.14 R47 58
4.1.8.15 R48 58
4.1.8.16 R49 59
4.1.8.17 R50 59
4.1.8.18 R51 59
4.1.8.19 R52 59
4.1.8.20 R53 60
4.1.8.21 R54 60
4.1.9 Control, Command, & Signals System 61
4.1.9.1 R55 61
4.1.9.2 R56 61
4.1.9.3 R57 61
4.1.9.4 R58 61
4.1.9.5 R59 61
4.1.9.6 R60 62
4.1.9.7 R61 62
4.1.9.8 R62 62

4.1.9.9 R63 62
4.1.9.10 R64 63
4.1.9.11 R65 63
4.1.9.12 R66 64
4.1.9.13 R67 64
4.1.9.14 R68 64
4.1.9.15 R69 65
4.1.9.16 R70 65
4.1.9.17 R71 65
4.1.9.18 R72 66
4.1.9.19 R73 66
4.1.9.20 R74 66
4.1.10 Pneumatics System 67
4.1.10.1 R75 67
4.1.10.2 R76 67
4.1.10.3 R77 67
4.1.10.4 R78 67
4.1.10.5 R79 68
4.1.10.6 R80 68
4.1.10.7 R81 69
4.1.10.8 R82 69
4.1.10.9 R83 69
4.1.10.10 R84 69
4.1.10.11 R85 69
4.1.10.12 R86 70
4.1.10.13 R87 70
4.1.10.14 R88 70
4.1.10.15 R89 70
4.1.11 OPERATOR CONSOLE 70
4.1.11.1 R90 70
4.1.11.2 R91 71
4.1.11.3 R92 71
4.1.11.4 R93 71
4.1.11.5 R94 71
4.2 Revision History 72
5 The Tournament 72
5.1 Overview 72
5.2 Practice Matches 73

5.2.1 Schedule 73
5.2.2 Filler Line 73
5.3 Qualification Matches 73
5.3.1 Schedule 73
5.3.2 MATCH Assignment 73
5.3.3 Qualification Score (QS) 74
5.3.4 Qualification Seeding 74
5.4 Elimination Matches 75
5.4.1 ALLIANCE Selection Process 75
5.4.2 BACKUP TEAMS 75
5.4.3 Elimination MATCH Bracket 76
5.4.4 Elimination Scoring 77
5.5 Tournament Rules 77
5.5.1 Safety and Security Rules 77
5.5.1.1 T01 77
5.5.1.2 T02 78
5.5.1.3 T03 78
5.5.1.4 T04 78
5.5.1.5 T05 78
5.5.2 Eligibility and Inspection 78
5.5.2.1 T06 79
5.5.2.2 T07 79
5.5.2.3 T08 79
5.5.2.4 T09 79
5.5.2.5 T10 79
5.5.2.6 T11 80
5.5.2.7 T12 80
5.5.3 Referee Interaction 80
5.5.3.1 T13 80
5.5.4 YELLOW and RED CARDS 80
5.5.5 ARENA Reset Rules 81
5.5.5.1 T14 81
5.5.5.2 T15 81
5.5.5.3 T16 81
5.5.6 TIMEOUT and BACKUP TEAM Rules 82
5.5.6.1 T17 82
5.5.6.2 T18 82
5.5.6.3 T19 82
5.5.6.4 T20 82

5.5.6.5 T21 83
5.5.7 Measurement 83
5.5.8 Special Equipment Rules 83
5.5.8.1 T22 83
5.6 Championship Additions 84
5.6.1 Championship Pit Crews 84
5.6.2 Championship BACKUP ROBOT 84
5.6.3 FRC Championship MATCH Bracket 84
6 Glossary 85
6.1 ULTIMATE ASCENT Terms 85

General Updates

Classmate Image Downloads

The Intel site hosting the Classmate Images is once again live. Teams can find it at:
http://www.intel.com/content/www/us/en/intel-learning-series/first-frc-image-system-overview.html

Optional FRC Utilities Update

An optional FRC Utilities Update (v2) has been released which removes the menu bar and run controls from the cRIO Imaging Tool to allow it to fit on the Classmate screen. Teams may still need to hide the Taskbar to see the Imaging Tool buttons by: right-clicking on the Taskbar, selecting Properties, checking the box to "Auto-hide the taskbar", then clicking OK to exit the dialog. No other changes have been made in this update. This update may be found via the 2013 Technical Resources **page.**

Game Manual
1 Introduction

***FIRST*®, the *FIRST*® logo, *FIRST*® Robotics Competition, FRC®, Coopertition®, and Gracious Professionalism® are registered trademarks, and Sport for the Mind™ and ULTIMATE ASCENT℠ are common law trademarks, of the United States Foundation for Inspiration and Recognition of Science and Technology (*FIRST*®). ©2013 *FIRST*. All rights reserved.**

1.1 What is the FIRST Robotics Competition (aka FRC)?

Take dedicated, enthusiastic students, teachers, engineers and other professionals, add six weeks for design and fabrication and you get a wide range of amazing machines that are competition ready.

The *FIRST* Robotics Competition (FRC) is an exciting program that assimilates Teams, Sponsors, Colleges and technical professionals with high school students to develop their solution to a prescribed engineering challenge in a competitive game environment. The competitions combine the practical application of science and technology with the fun, intense energy and excitement of a championship-sporting event. The program results in life-changing, career molding experiences for its participants and is also great fun.

In 2013, FRC will reach nearly 60,000 students representing approximately 2,600 Teams. FRC Teams come from every state in the United States, as well as from Australia, Bosnia, Brazil, Canada, Chile, China, the Dominican Republic, Germany, Israel, Mexico, Spain, Taiwan, Turkey, and the United Kingdom. FRC has become an international program and is continuously growing. FRC Teams will participate in fifty-eight (58) Regional Competitions, eleven (11) Michigan District Events, the Michigan State Championship, six (6) Mid-Atlantic Robotics District Events, and the MAR Region Championship. Four hundred (400) deserving Teams will qualify to go to the *FIRST* Championship at The Edward Jones Dome in St. Louis, MO.

This year's challenge will be presented at the 2013 FRC Kickoff on Saturday, January 5, 2013. At the Kickoff event, all Teams:

- see the 2013 game for the first time;
- learn about the 2013 game rules and regulations; and
- receive a Kit of Parts (KOP). The KOP includes, but is certainly not limited to, motors, sensors, chassis hardware, transmissions, software packages, control systems and batteries. The intent of the kit is to provide a level starting point for all Teams.

1.2 Gracious Professionalism, A FIRST Credo

Dr. Woodie Flowers, *FIRST* National Advisor and co-founder of FRC, asks:

"Why do *FIRST* folks talk so much about that phrase?"

Dr. Flowers elaborates on the significance of Gracious Professionalism™ in*FIRST*, at work and in life, below.

" *FIRST* does not celebrate being an incompetent jerk. *FIRST* does celebrate high-quality, well-informed work done in a manner that leaves everyone feeling valued. Gracious Professionalism seems to be a good descriptor for a big part of the ethos of *FIRST*. It is one of the things that makes *FIRST* different and wonderful.

Gracious Professionalism has purposefully been left somewhat undefined because it can and should mean different things to each of us. We can, however, outline some of its possible meanings. Gracious attitudes and behaviors are win-win. Gracious folks respect others and let that respect show in their actions. Professionals possess special knowledge and are trusted by society to use that knowledge responsibly. Thus, gracious professionals make a valued contribution in a manner pleasing to others and to themselves.

In *FIRST*, one of the most straightforward interpretations of Gracious Professionalism is that we learn and compete like crazy, but treat one another with respect and kindness in the process. We try to avoid leaving anyone feeling like they have lost. No chest-thumping barbarian tough talk, but no sticky sweet platitudes either. Knowledge, pride and empathy comfortably blended.

Understanding that Gracious Professionalism works is NOT rocket science. It is, however, missing in too many activities. At *FIRST*, it is alive and well. Please help us take care of it.

In the long run, Gracious Professionalism is part of pursuing a meaningful life. If one becomes a professional, and uses knowledge in a gracious manner, everyone wins. One can add to society and enjoy the satisfaction of knowing that he or she has acted with integrity and sensitivity. That's good stuff!"

1.3 Prominent FRC Awards

FIRST recognizes both on-field and off-field Team performance that promotes *FIRST*'s mission to change culture. Several awards celebrate Team competencies including, but not limited to, technical expertise, community involvement, and safety practices. The two most prominent FRC awards are described below (however, for a complete list and description of awards available to Teams, please reference *The FRC Administrative Manual, Section 6*).

1.3.1 The Chairman's Award

Every year, veteran FRC Teams have the opportunity to compete for *FIRST*'s most prestigious award; i.e., the Chairman's Award. This Award was created to maintain focus on changing culture in ways that would inspire greater levels of respect and honor for science and technology, as well as encourage more of today's youth to become scientists, engineers and technologists. It represents the spirit of *FIRST*. The Chairman's Award honors the Team that best embodies the goals and purpose of *FIRST* and is a model for other Teams to emulate.

Teams who have won the Chairman's Award at the Championship are entered into the *FIRST* Hall of Fame. Past Hall of Fame inductees are listed below.

Table 1-1: Chairman's Award Winning Teams

Year	Team	Official Team Name
2012	1114	General Motors St. Catharines Powertrain / Innovation First International & Governor Simcoe Secondary School
2011	359	NASA/Castle & Cooke, Inc. Dole Plantation/McInerny Foundation/University of Hawaii-Melvin Matsunaga/Randy Wood/Hawaii Space Grant Consortium/Ted's Bakery/AFCEA Hawaii/Waialua High School Foundation/Friends of Hawaii Robotics/North Shore Hanapa'a Club/BAE Systems/Waialua Federal Credit Union/Waialua Lions Club/Hawaiian Dredging/University of Hawaii-College of Engineering/Iron Horse Development/Dole Food Company of Hawaii/Hawaii Visitors and Convention Bureau/Aloha Gourmet Products/GT Pies/Islander Group/KTM Services Inc./Maui Divers of Hawaii/Pioneer Hi-Bred International/Gone Tropo, LLC/Kai Media & Marketing/Coca Cola Hawaii/Learning Train LLC/Oils of Aloha/The Duck Company/GAK Enterprises/H&W Foods/Sharpshooter Spectrum Venture/Sunset International/Pacific Jobbers Warehouse/Gordon Kuwada/CMKLV/Charles Nakoa III/Hawaii State Federal Credit Union/Kenneth Koga & Waialua High School & HI DOE
2010	341	DOW Chemical/Lockheed Martin/Cobham Defense Electronics/Comcast Cable/BAE Systems/Centocor Ortho BioTech/Johnson & Johnson PRD/JCPenney/PJM Interconnection/DeVry University & Wissahickon High School & North Montco Technical Career Center
2009	236	Dominion Millstone Power Station & Lyme-Old Lyme (CT) High School
2008	842	Honeywell / Arthur M. Blank Foundation / Science Foundation Arizona / Intel / Vegas Fuel / Wells-Fargo & Carl Hayden High School
2007	365	DuPont Engineering/DuPont CCRE/First State Robotics & MOE Robotics Group
2006	111	Motorola & Rolling Meadows High School & Wheeling High School
2005	67	General Motors Milford Proving Ground and Huron Valley Schools
2004	254	NASA Ames Research Center/Laron Incorporated/Unity Care Group/Line-X of San Jose/PK Selective Metal Plating, Inc. & Bellermine College Preparatory
2003	103	NASA/Amplifier Research/Custom Finishers/Lutron Electronics/BAE Systems & Palisades High School
2002	175	Hamilton Sundstrand Space Systems International/The New England Air Museum/Techni-Products/Veritech Media & Enrico Fermi High School
2001	22	NASAJPL/Boeing/Rocketdyne/FADL Engineering/Decker Machine & Chatsworth High School
2000	16	Baxter Healthcare Corporation & Mountain Home High School
1999	120	NASA Lewis Research Center/TRW, Inc./Battelle Memorial Institute & East Technical High School
1998	23	Boston Edison & Plymouth North High School
1997	47	Delphi Corporation & Pontiac Central High School
1996	144	Procter & Gamble & Walnut Hills High School
1995	151	Lockheed Sanders & Nashua High School
1994	191	Xerox Corporation & JC Wilson Magnet High School
1993	7	AT&T Bell Labs & Science High School
1992	191	Xerox Corporation & JC Wilson Magnet High School

1.3.2 The Woodie Flowers Award

The Woodie Flowers Award celebrates mentors who lead, inspire and empower their Team. Woodie Flowers Award winners demonstrate effective communication in the art and science of engineering and design. Founded in 1996 by Dr. William Murphy, the Woodie Flowers Award is presented to an outstanding engineer or teacher participating in FRC who lead, inspire, and empower using excellent communication skills.

Students submit an essay that nominates one mentor from their Team for consideration. Past winners of this award are listed below.

Table 1-2: Woodie Flowers Award Winners

Year	Name	Title
2012	Mr. Earl Scime	Eberly Distinguished Professor & Chair of Physics, West Virginia University
2011	Mr. John Larock	Staffing Manager, Dupont
2010	Mr. Chris Fultz	Program Director - RR500 and New Product Introduction, Defense Sector, Rolls Royce
2009	Mr. John Novak	Engineer, Baxter Healthcare Corporation
2008	Mr. Mark Breadner	Vice Principal, Toronto District School Board
2007	Mr. Dan Green	Director, New Technology Business Operations, Motorola
2006	Mr. Rob Mainieri	Teacher, The Preuss School at UCSD
2005	Mr. Paul Copioli	Staff Engineer, FANUC Robotics America
2004	Mr. David Kelso	Teacher, Central High School
2003	Mr. Andy Baker	President, AndyMark, Inc.
2002	Mr. David Verbrugge	Engineer, GM Proving Ground
2001	Mr. William Beatty	Beatty Machine & Manufacturing Company
2000	Ms. Kyle Hughes	Teacher, OSMTech Academy
1999	Mr. Ken Patton	Engineer, GM Powertrain
1998	Mr. Michael Bastoni	Teacher, Plymouth North High School
1997	Ms. Elizabeth Calef	Teacher, Bridgewater-Raynham Regional High School

1.4 Safety: A FIRST Culture

Safety is critical within *FIRST* and must be observed continuously by all participants. As a part of the Safety Awareness and Recognition Program, Teams are observed and evaluated at many different levels and by many individuals at the event.

“Safety Advisors” evaluate Team safety behavior and practices at Regional Competitions.

“Referees” observe safety on the playing field as well as adherence to the game rules.

“Judges” evaluate how Teams have integrated safety into their robot designs when considering the Team for technical awards.

Safe practices at the competitions are required. Teams are urged to adopt safe habits throughout the entire competition season including during travel to and from events and while working in their shops at home.

1.5 Robot Design and Build Schedule

One of the purposes of the FRC is to provide Team members with the experience of conceiving, designing, and constructing their solution to the annual competition challenge. We want each student to have the experience of creating a new system each year. As the Team considers the creation of their machine, this aspect of the program should be kept in mind. Solutions that merely bolt together a minimum number of externally-designed COTS subsystems may not offer the students the opportunity to understand the “why” or “how” of an item’s design. Likewise, solutions that are merely minor modifications of a design utilized for a previous competition does not offer the current students complete insight into the full design process. Purchasing optimization and design re-use are both important concepts; however, Teams must be cautious not to over-utilize them to the point that the student’s experience is compromised.

This intent is clearly met when a Team obtains a Mechanism or COTS items that was designed for non-*FIRST* purposes, and then modifies or alters it to provide functionality for the robot. For example, if a Team obtains a gearbox from a power drill and modifies it to use on the robot, they gain insight into the design of the original gearbox purpose, learn to characterize the performance of the original design, and implement the engineering design process to create their customized application for the gearbox.

However, COTS items that have been specifically designed as a solution to part of the FRC challenge may or may not fit within the FRC intent, and must be carefully considered. If the item provides general functionality that can be utilized in any of several possible configurations or applications, then it is acceptable (as the Teams will still have to design their particular application of the item). However, COTS items that provide a complete solution for a major robot function (e.g. a complete manipulator assembly, pre-built pneumatics circuit, or full mobility system) that require no effort other than just bolting it on to the robot are against the intent of the competition and will not be permitted.

1.6 ULTIMATE ASCENT Summary

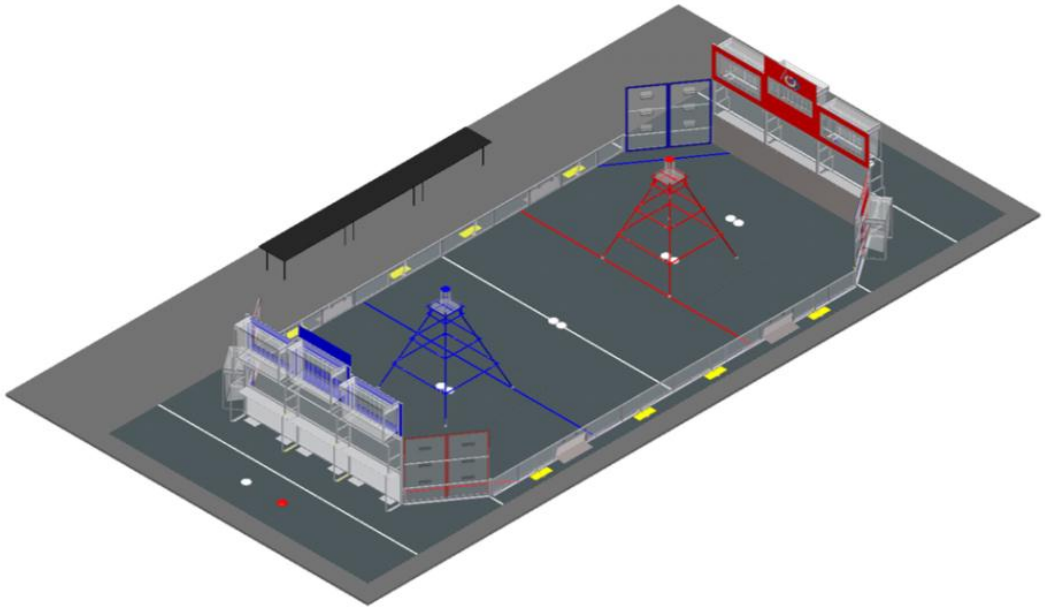

Figure1-1: ULTIMATE ASCENT ARENA

ULTIMATE ASCENT is played by two competing alliances on a flat, 27 x 54 ft field. Each alliance consists of three

robots. They compete to score as many discs into their goals as they can during a two (2)-minute and fifteen (15)-second match. The higher the goal in which the disc is scored, the more points the alliance receives.

The match begins with a fifteen (15)-second Autonomous Period in which robots operate independently of driver inputs. Discs scored during this period are worth extra points. For the remainder of the match, drivers control robots and try to maximize their alliance score by scoring as many goals as possible.

The match ends with robots attempting to climb on pyramids located near the middle of the field. The robot earns points based on how high it climbs. Scoring for the match is summarized below.

Table 1-3: Disc Points

	AUTO	**TELEOP**
LOW GOAL	2	1
MIDDLE GOAL	4	2
HIGH GOAL	6	3
PYRAMID GOAL	N/A	5

Table 1-4: Pyramid Climb Points

Level	Points
1	10
2	20
3	30

2 The Arena

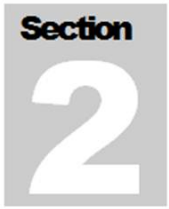

***FIRST*®, the *FIRST*® logo, *FIRST*® Robotics Competition, FRC ®, Coopertition®, and Gracious Professionalism® are registered trademarks, and Sport for the Mind™ and ULTIMATE ASCENT℠ are common law trademarks, of the United States Foundation for Inspiration and Recognition of Science and Technology (*FIRST*®). ©2013*FIRST*. All rights reserved.**

2.1 Overview

Note: These illustrations are for a general visual understanding of the ULTIMATE ASCENT^{SM} ARENA only. Please refer to the [2013 Official FIRST Field Drawings & Models](#) for exact dimensions and construction details.

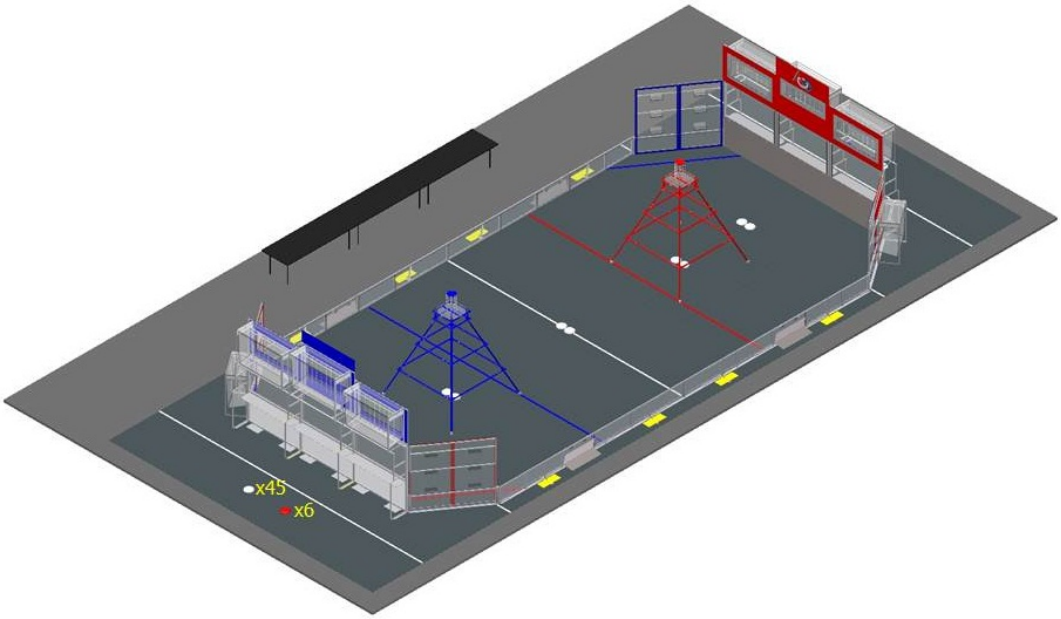

Figure 2-1: ULTIMATE ASCENT ARENA

The ARENA includes all elements of the game infrastructure that are required to play ULTIMATE ASCENT: the FIELD, the ALLIANCE STATIONS, the DISCS, and all supporting communications, ARENA control, and scorekeeping equipment.

ROBOTS play ULTIMATE ASCENT in an octagonal space known as the FIELD. During MATCHES, ROBOTS are controlled from ALLIANCE STATIONS located outside the ends of the FIELD. Each ALLIANCE STATION consists of three PLAYER STATIONS that provide connectivity between the controls used by the DRIVERS and the ROBOTS. There are GOALS mounted along the entire length of the ALLIANCE STATION and on top of the PYRAMID.

The drawings and CAD models, drawings for low-cost versions of the important elements of the ARENA, and links to CAD models hosted by Autodesk and PTC for ULTIMATE ASCENT can be found on the *[2013 Official FIRST Field Drawings & Models](#)* (dimensions stated in this document are nominal).

The competition ARENA is a modular construction that is assembled, used, disassembled, and shipped many times during the competition season. It may undergo wear and tear. The ARENA is designed to withstand rigorous play and frequent shipping, and every effort is made to ensure that the ARENAS are consistent from event to event. However, as the ARENA is assembled in different venues by different event staff, some small variations do occur. Fit and tolerance on large assemblies (e.g. the LOW GOALS) are ensured only to within ¼ in. Overall gross dimensions of the entire FIELD may vary up to 4 in. Successful teams will design ROBOTS that are insensitive to these variations.

2.2 The ARENA

Note: The official ULTIMATE ASCENT ARENA description, layout, dimensions and parts list are contained in [FE-00036 - 2013 ARENA Layout and Marking](#). Diagrams and dimensions below are for illustrative purposes only.

2.2.1 The FIELD

The FIELD for ULTIMATE ASCENT is a 27 by 54 ft. carpeted area, bounded by ALLIANCE WALLS, FEEDER STATIONS, LOW GOALS, and GUARDRAILS. The FIELD floor is covered with carpet (Shaw Floors, Philadelphia Commercial, Neyland II, 20, 30753, “Ground Pepper”). Three (3) GOALS are located at each end of the FIELD above each ALLIANCE WALL. A fourth GOAL and three (3) FEEDER STATIONS are located in the corners next to each ALLIANCE WALL. A PYRAMID is adjacent to each ALLIANCE’S AUTO LINE. At the top of each PYRAMID sits a PYRAMID GOAL. Each LOADING ZONE is a trapezoidal area bounded by two (2) FEEDER STATIONS, an ALLIANCE WALL, a GUARDRAIL, and Red or Blue tape.

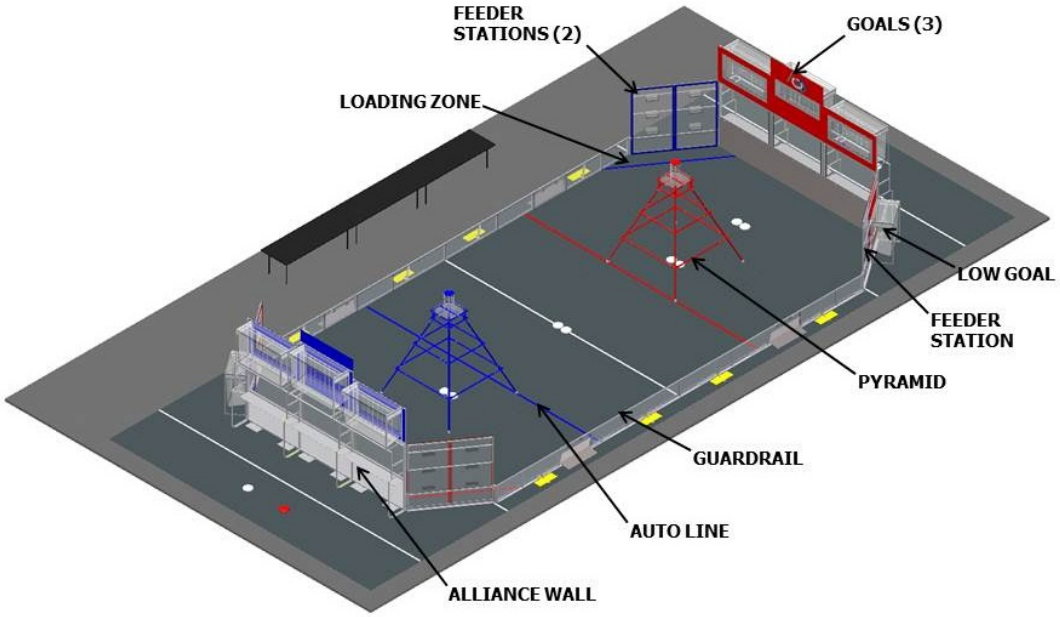

Figure 2-2: Basic FIELD Layout

The ALLIANCE WALLS are 6 ½ ft. high, 18 ft. wide, and define the ends of the FIELD. The ALLIANCE WALL protects the PLAYER STATIONS and is composed of a 3 ft. high base of diamond plate aluminum topped with a 3 ½ ft. high transparent polycarbonate panel.

The GUARDRAIL is a system that consists of horizontal pipes that are 20 in. above the floor and supported by vertical struts mounted on a 3 in. aluminum angle. A transparent polycarbonate shield is attached on the inside of the GUARDRAIL, extending from the floor to the top of the GUARDRAIL, and running the length of the GUARDRAIL. The shield is intended to help prevent ROBOTS, in whole or in part, from inadvertently exiting the FIELD during a MATCH. The GUARDRAIL defines the borders of the FIELD, except where it is bounded by the ALLIANCE WALL, FEEDER STATIONS or LOW GOALS.

Four gates in the GUARDRAIL allow access to the FIELD for placement and removal of ROBOTS. The gates are 38 in. wide, and are closed and shielded during MATCHES.

2.2.2 FIELD Markings

FIELD markings are shown in Figure 2-3 and are for illustrative purposes only. Please refere to drawing *FE-00036* for

exact dimensions.

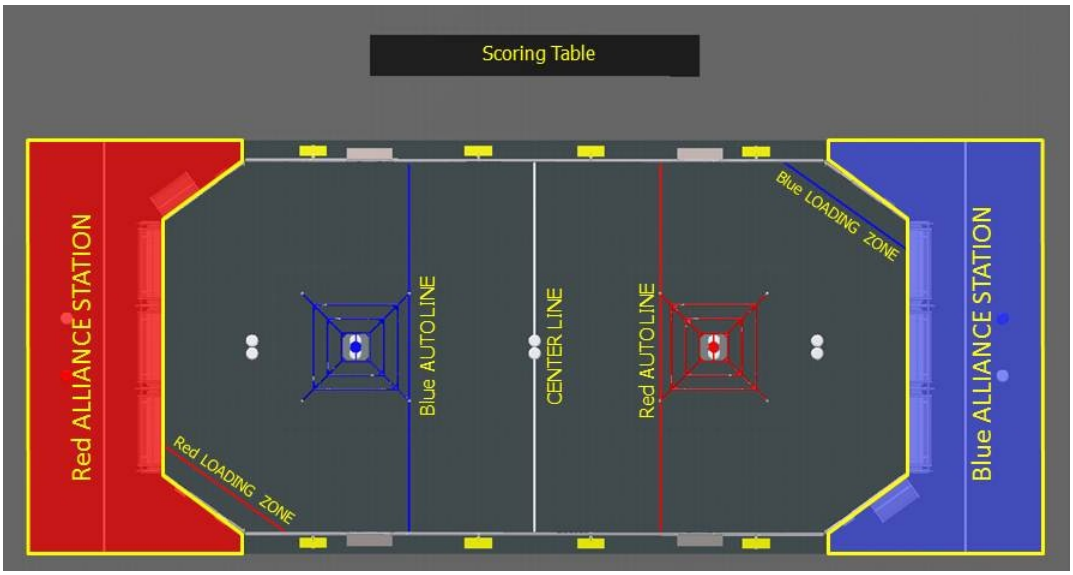

Figure 2-3: FIELD Markings

Three lines (Red, White, and Blue) span the width of the FIELD. The White line is the CENTER LINE, marked with 2 in. White gaffers tape. The Red and Blue lines are AUTO LINES, located 108 in. to either side of the CENTER LINE. These are marked with 2 in. red or blue gaffers tape.

Each ALLIANCE has one LOADING ZONE that is located in front of their double FEEDER STATION. This zone is defined by a 2 in. red or blue gaffers tape line that is offset 20 in. from the FEEDER STATIONS.

2.2.3 The GOALS

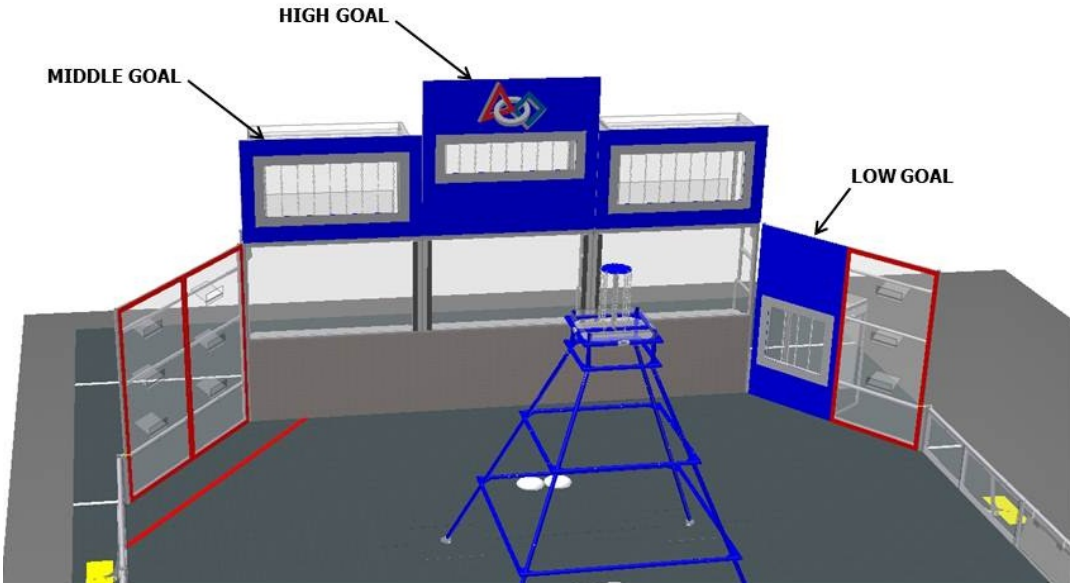

Figure 2-4: The GOALS

Each ALLIANCE'S LOW GOAL is located adjacent to the opponent ALLIANCE WALL and to the opponent DRIVERS' left. The opening of the LOW GOAL is 29 in. wide and 24 in. tall. The bottom edge of the LOW GOAL is located 19 in. from the playing surface of the FIELD.

Two MIDDLE GOALS and one HIGH GOAL are located above each ALLIANCE WALL. The two MIDDLE GOALS have openings that are 54 in. wide and 21 in. tall. The bottom edge of the MIDDLE GOAL is located 88 $^{5}/_{8}$ in. above the FIELD. The HIGH GOAL is 54 in. wide and 12 in. tall with the bottom edge of the opening located 104 $^{1}/_{8}$ in. above the surface of the FIELD. Hanging from the top of the post are chains (Ace Hardware P/N: 5365283) to help dampen the DISCS as they enter the GOAL. These chains are 9 ½ in. back from the front of the GOAL and spaced 6 ½ in. apart.

Located atop each PYRAMID is a PYRAMID GOAL. The PYRAMID GOAL is a polycarbonate and metal framed "basket" that is a 23 $^{5}/_{8}$ in. square that is 2 $^{3}/_{4}$ in. deep. Rising out of the center of the PYRAMID GOAL is a 20 in. tall, 1 $^{1}/_{2}$ in. diameter post. Hanging from the top of the post are chains (Ace Hardware P/N: 5365283) to help dampen the DISCS as they enter the PYRAMID GOAL.

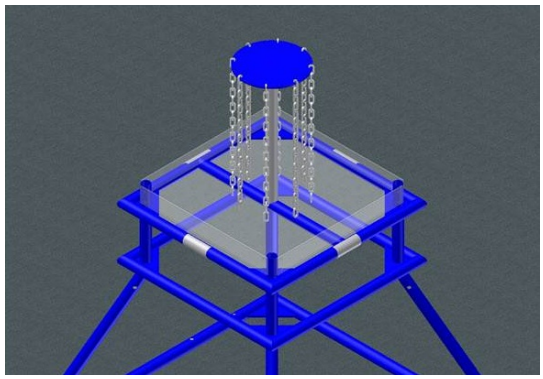

Figure 2-5: PYRAMID GOAL

2.2.4 The VISION TARGETS

Each GOAL has an associated VISION TARGET made of retro-reflective material (3M 8830 Silver Marking Film).

The VISION TARGETS for the LOW, MIDDLE, and HIGH GOALS consist of a 4 in. wide border of retro-reflective material around the GOAL opening. An additional VISION TARGET is located on either side of the center PLAYER STATION, made up of a 4 in. wide, 32 in. tall stripe of retro-reflective material bordered by 2 in. wide black gaffers tape on the left and right sides. These stripes begin 36 in. above the FIELD carpet and are 72 in. apart, measured center-to-center.

The PYRAMID GOAL VISION TARGET is made up of two components. The first component is a 4in. wide retro-reflective marker located on the center of each horizontal metal pole of the GOAL basket. The second component is retro-reflective material covering the 20 in. tall, 1 ½ in. diameter post in the center of the PYRAMID GOAL.

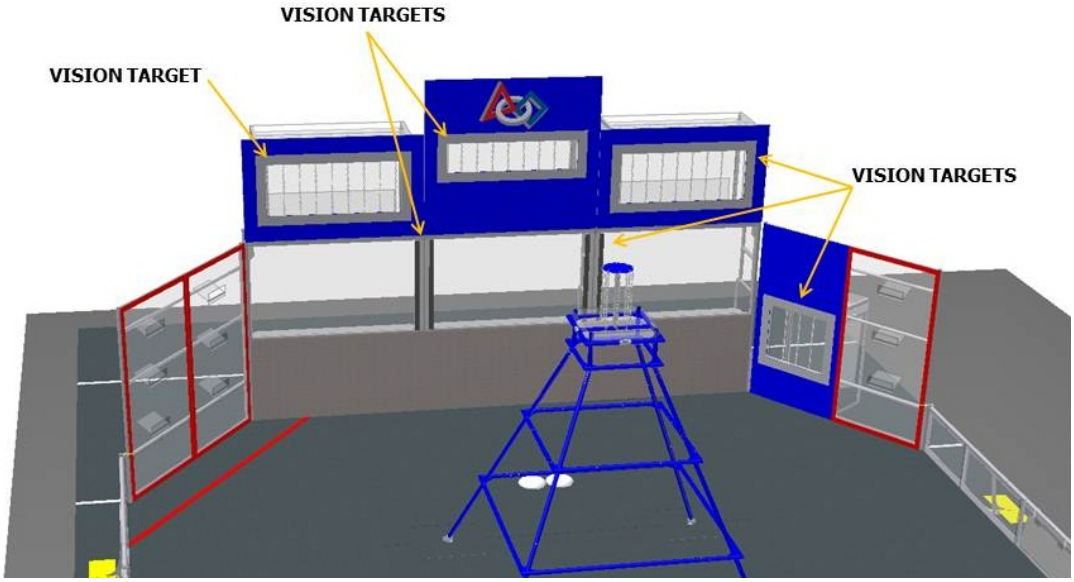

Figure 2-6: The VISION TARGETS

2.2.5 The PYRAMIDS

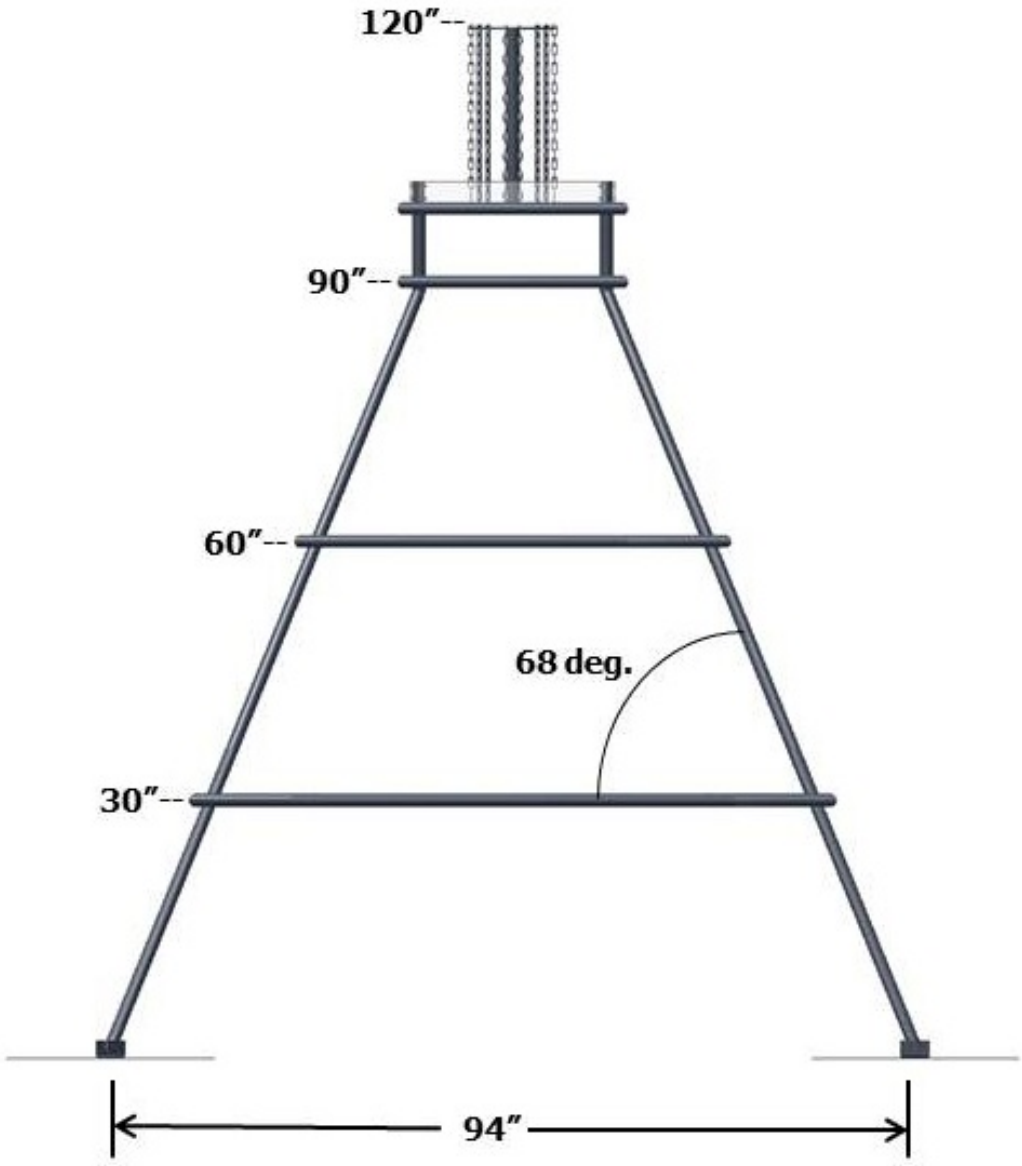

Figure 2-7: The PYRAMIDS

An ALLIANCE specific PYRAMID is located in each half of the FIELD. The PYRAMID is made out of 1 $^{1}/_{2}$ in. diameter steel tubing and powder coated Red or Blue. It is 94 in. wide at the base and each side slanted at a 68-degree slope. The rungs are located 30 in., 60 in., and 90 in. off of the floor. At the top of the PYRAMID is the PYRAMID GOAL, detailed in Section 2.2.4 The GOALS.

The PYRAMID has four (4), 24 in. square, 11 GA. (.120 in.) steel bases with hook and loop tape ("hook" side) on the bottom. These bases secure the PYRAMIDS to the carpet. To prevent damage to venue floors, these metal bases are surrounded by floor protectors. These floor protectors are made from $^{1}/_{8}$ in. thick hardboard. The floor protectors begin 12 in. outside of all the PYRAMID bases and continue to cover the floor underneath the PYRAMID (not including the bases themselves). Additional carpet covers both bases and floor protectors and is held to the carpet using 2 in. wide, Black gaffers tape. The protectors and carpet create a $^{1}/_{4}$ - $^{3}/_{8}$ in. lip around the PYRAMID.

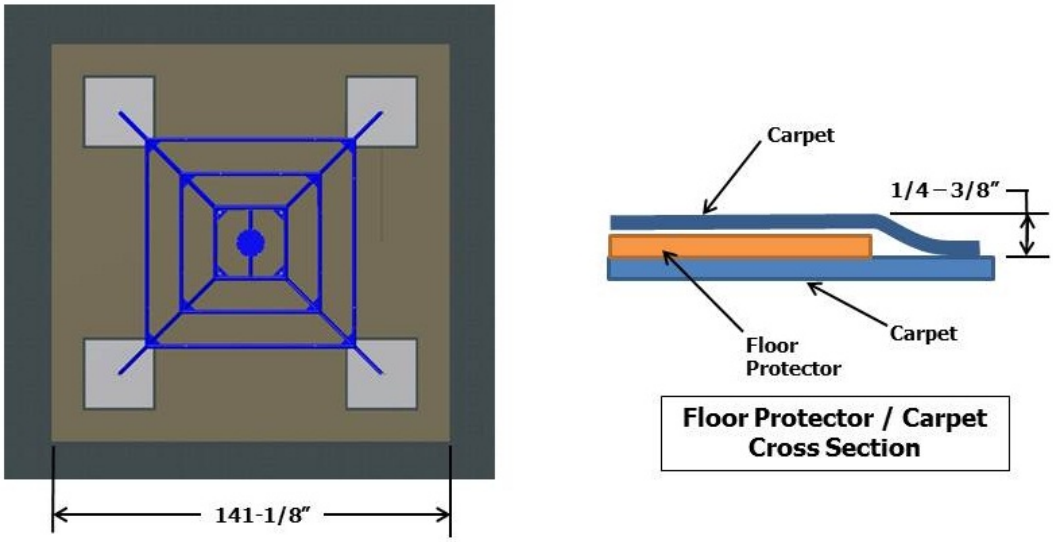

Figure 2-8: PYRAMID Floor Protectors

Teams may have to remove their ROBOT from the PYRAMID after the MATCH is over with the aid of a *FIRST* supplied belay system, per G04. The belaying device acts as a brake to prevent accidentally dropped ROBOTS from causing injuries to teams. The device attaches to the ROBOTS with two carabiners or loops of rope. Teams must supply two attachment points for the belaying device to mount to their ROBOTS, per R10.

Only trained event staff are allowed to use the belaying device.

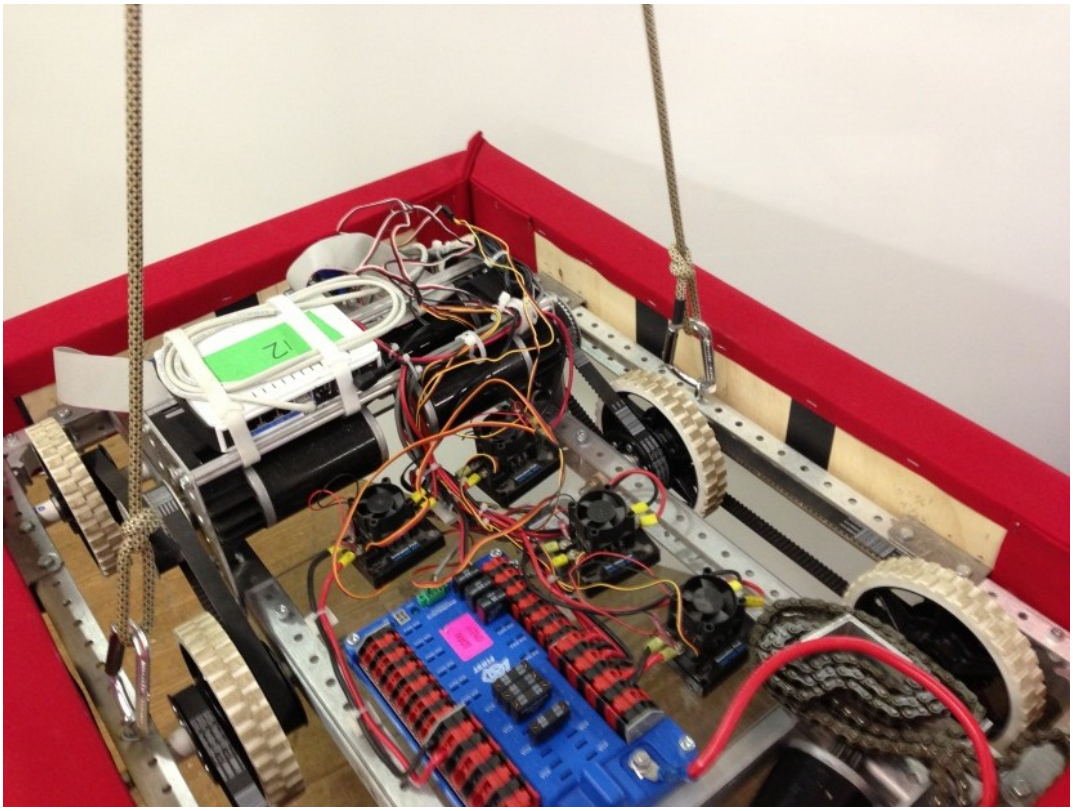

Figure 2-9: ROBOT Using Belay Device

2.2.6 The ALLIANCE STATIONS

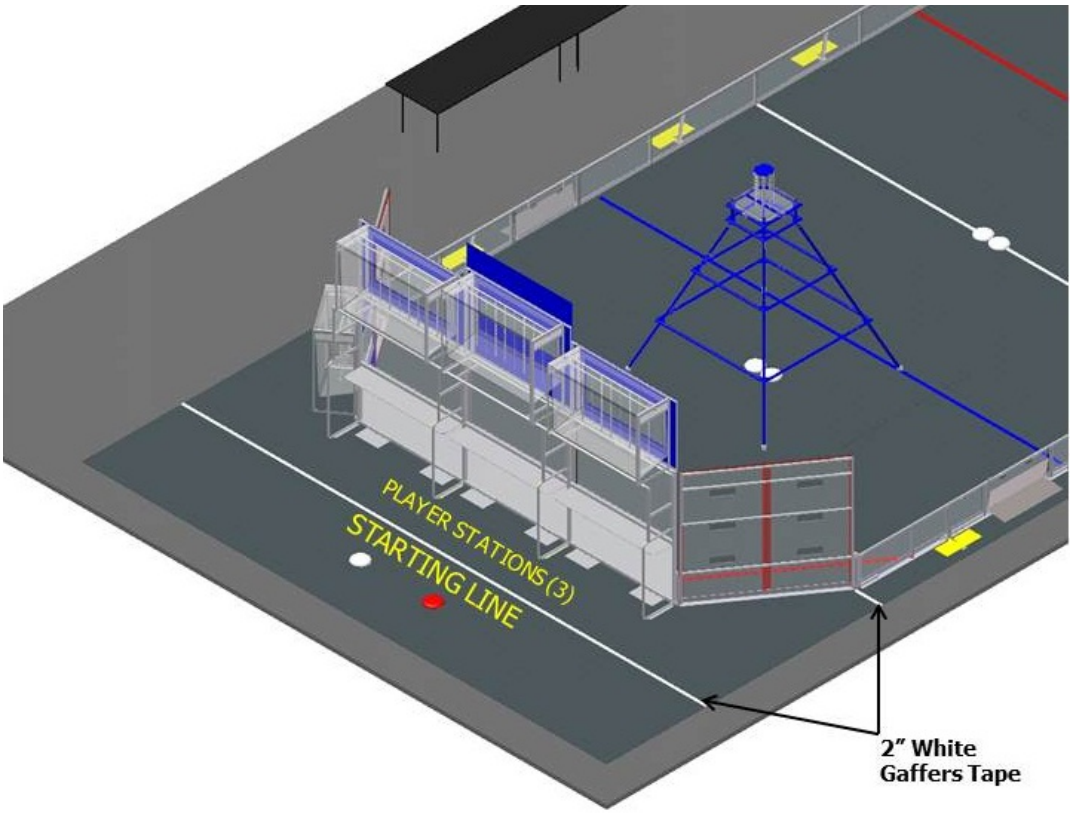

Figure 2-10: The ALLIANCE STATIONS

The ALLIANCE STATIONS are located at either end of the FIELD, behind the ALLIANCE WALLS. The ALLIANCE STATION extends 10 ft. back from the ALLIANCE WALL, and spans the entire width of the wall. The ALLIANCE STATION includes the three (3) PLAYER STATIONS, one (1) FEEDER/GOAL STATION and one (1) double FEEDER STATION. The STARTING LINE is marked with White 2 in. wide gaffers tape 4 ft. behind the ALLIANCE WALL. The ALLIANCE STATION includes the area behind the corners of the FIELD, with the end of the ALLIANCE STATION marked out in 2 in. white gaffers tape. The tape boundaries are not considered part of the bounded areas.

2.2.7 The FEEDER STATIONS

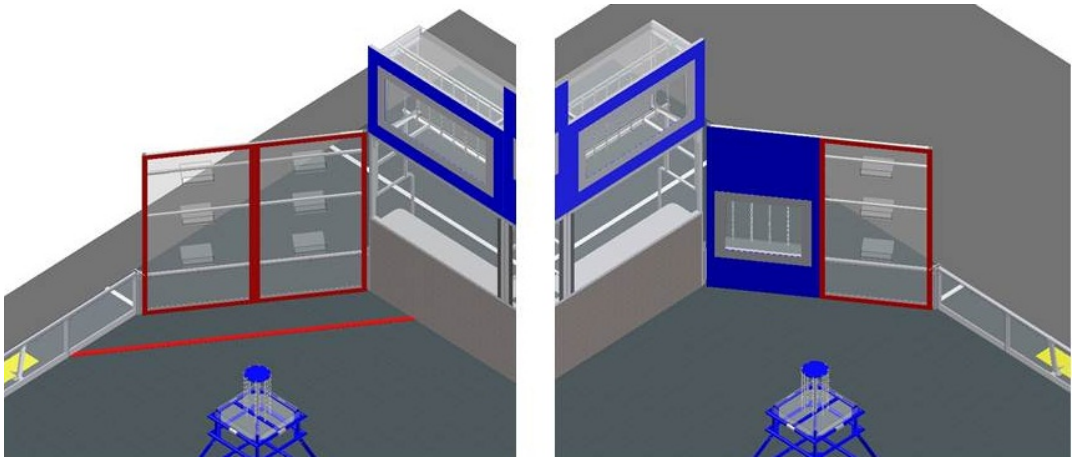

Figure 2-11: The FEEDER STATIONS

There are three (3) FEEDER STATIONS per ALLIANCE. Two (2) FEEDER STATIONS are located side by side in one corner of the FIELD to the right of the ALLIANCE'S DRIVERS. The third FEEDER STATION is located next to the opponent's LOW GOAL on the opposite side of the ALLIANCE STATION.

All of the FEEDER STATIONS consist of a 44 in. wide shield of clear polycarbonate. In the center of the shield are three horizontal FEEDER SLOTS, 12 in. wide by 3 in. high. These slots are located 22 in., 42 in. and 62 in. from the FIELD carpet to the bottom of the slot. Each slot has a slide attached to it on the FEEDER side of the plastic. These slides are 8 in. long and are at a 30-degree incline.

2.2.8 The PLAYER STATIONS

Attached to the ALLIANCE WALL in each PLAYER STATION is an aluminum shelf to support the OPERATOR CONSOLE for the FRC Team in that PLAYER STATION. The support shelf measures 69 in. wide by 12 in. deep. There is a 54 in. long by 2 in. wide strip of hook-and-loop tape ("loop" side) along the center of the support shelf that may be used to secure the OPERATOR CONSOLE to the shelf. Each setup location includes a competition cable (to provide Ethernet connectivity) that attaches to the Ethernet Port of the OPERATOR CONSOLE. The cable provides communications with the ROBOT via the ARENA network.

Each PLAYER STATION also includes a power adapter cable that may be used to power the Classmate laptops that were provided to teams in the Kit of Parts starting in 2010. Emergency Stop (E-Stop) buttons for each ROBOT are located on the left side of each PLAYER STATION shelf. ARENA components (including team number displays, competition ARENA hardware, ALLIANCE lights, control hardware cabinets and clock displays) are also located above the PLAYER STATIONS and below the shelf.

Once plugged in to the Field Management System (FMS) via the Ethernet cable provided, the only open ports in the ARENA network are as follows:

A. TCP 1180: This port is typically used for camera data from the cRIO to the Driver Station (DS) when the camera is connected to port 2 on the 8-slot cRIO (P/N: cRIO-FRC). This port is bidirectional.
B. TCP 1735: SmartDashboard, bidirectional
C. UDP 1130: Dashboard-to-ROBOT control data, directional
D. UDP 1140: ROBOT-to-Dashboard status data, directional
E. HTTP 80: Camera connected via switch on the ROBOT, bidirectional
F. HTTP 443: Camera connected via switch on the ROBOT, bidirectional

Teams may use these ports as they wish if they do not employ them as outlined above (i.e. TCP 1180 can be used to pass data back and forth between the ROBOT and the DS if the team chooses not to use the camera on port 2).

2.2.9 The Netting

In order to protect event attendees, a tall net runs parallel to both sides of the GUARDRAIL. The net is made up of three panels that are 10 ft. tall and 14 ft. long. The net is made from black nylon rope woven into a 5 in. mesh, with vinyl trim on all four sides. The panels hang on poles that are connected to steel, free standing bases (not attached to the GUARDRAILS). The net will be set up 12 to 36 in. away from the GUARDRAILS depending on venue space. The panels will be able to be folded back to allow access to the FIELD between MATCHES.

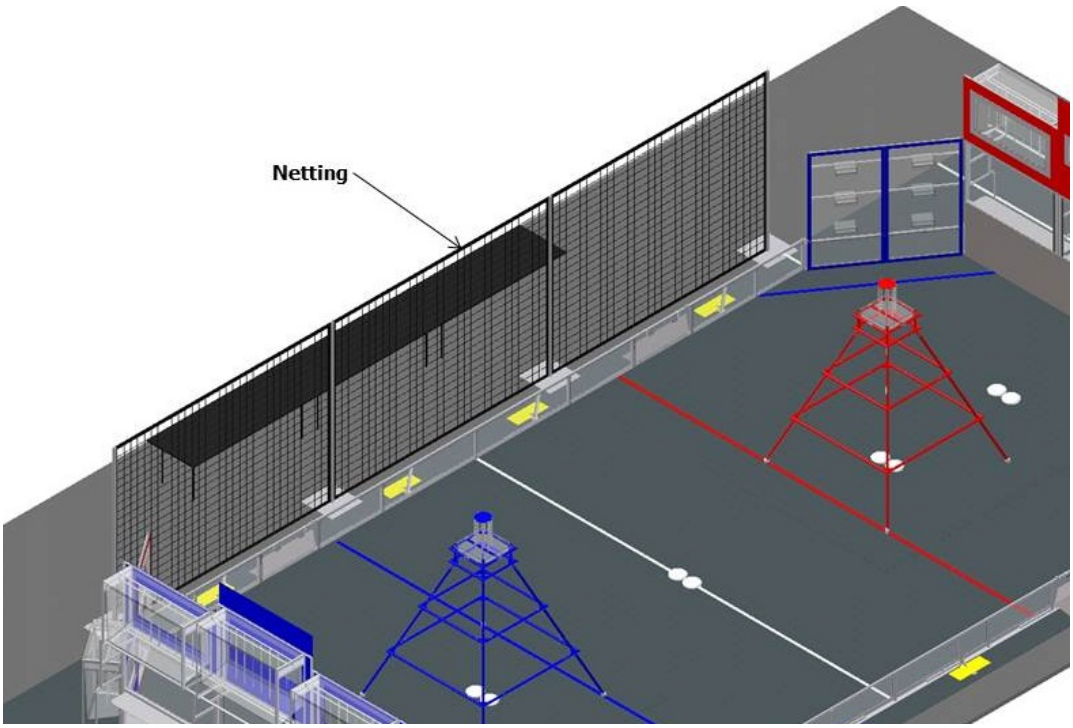

Figure 2-12: The Netting

2.2.10 The DISCS

The DISCS are Wham-O part number 53214 (custom colored Red, White, or Blue) and have a nominal diameter of 11 in., a nominal height of 1.4 in., and a weight of 180 ± 5 grams.

Figure 2-13: Red, White, and Blue DISCS

2.3 Revision History

Date	Section	Change
1/8/13	2.2.10	Updated sizes of DISCS

3 The Game

Section 3

***FIRST*®, the *FIRST*® logo, *FIRST*® Robotics Competition, FRC ®, Coopertition®, and Gracious Professionalism® are registered trademarks, and Sport for the Mind™ and ULTIMATE ASCENT℠ are common law trademarks, of the United States Foundation for Inspiration and Recognition of Science and Technology (*FIRST*®). ©2013*FIRST*. All rights reserved.**

Teams playing ULTIMATE ASCENT℠ use their ROBOTS to collect and score DISCS in a variety of GOALS. Teams earn additional points by CLIMBING their ALLIANCE'S PYRAMID by the end of the MATCH. This chapter contains two sections: the first section describes the game and what Teams may expect, and the second section covers the detailed rules by which competitors must abide.

3.1 Game Details

Details such as the FIELD set up, MATCH execution, point values, etc. are defined in this section.

3.1.1 MATCH Setup

Before the start of each MATCH, the ARENA is populated with 118 White DISCS, 6 Red DISCS, and 6 Blue DISCS. DISCS are staged as follows:

A. No more than two (2) or three (3) White DISCS may be preloaded in each ROBOT by the TEAM, depending on the ROBOT'S starting position (see G06 for details).
B. At least ten (10) White DISCS are staged on the FIELD approximately as illustrated in Figure 3-1.
    A. Two (2) DISCS are centered between the GUARDRAILS and 78 in. from the Blue ALLIANCE WALL to the center of the DISC.
    B. Two (2) DISCS are centered under the Blue PYRAMID.
    C. At least two (2) DISCS are placed centrally between the GUARDRAILS and along the field CENTER LINE.
    Any DISCS not preloaded in ROBOTS per part Aabove (e.g. the ROBOT is preloaded with fewer than three (3) DISCS, the ROBOT isn't in the MATCH, etc.) are placed adjacent to the DISCS on the CENTER LINE. The non-preloaded DISCS are added to each side of the existing pair such that the group of DISCS on the CENTER LINE is centered. If there is an odd number of DISCS staged on the CENTER LINE, the extra DISC will be placed on the scoring table side of the group.
    D. Two (2) DISCS are centered under the Red PYRAMID.
    E. Two (2) DISCS are centered between the GUARDRAILS and 78 in. from the Red ALLIANCE WALL to the center of the DISC.
C. 6 Red & 45 White DISCS are located in the Red ALLIANCE STATION.
D. 6 Blue & 45 White DISCS are located in the Blue ALLIANCE STATION.

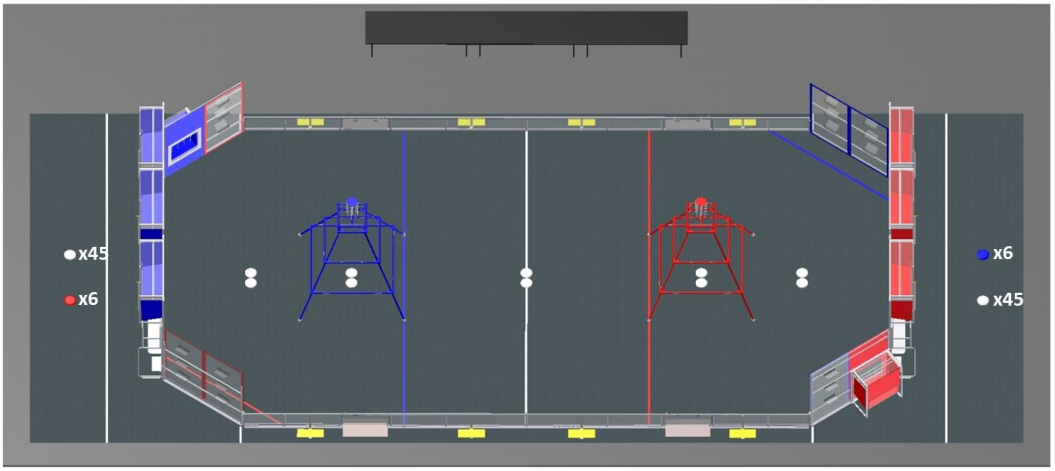

Figure 3-1: Starting Locations for DISCS

3.1.2 MATCH Timing

A MATCH is two (2) minutes and fifteen (15) seconds long. The Autonomous (AUTO) Period is the first fifteen (15) seconds of the MATCH. The Teleoperated Period (TELEOP) is the remaining two (2) minutes. Each Period ends when the ARENA timer displays zero (0) seconds.

3.1.3 MATCH Logistics

DISCS that are ejected from gameplay during a MATCH will be placed back in the FIELD by event staff approximately where they left and at the next safe opportunity.

3.1.4 Penalty Assignment

Upon a rule violation, FOUL or TECHNICAL FOUL points will immediately be credited to the opposing ALLIANCE. Values are defined in Table 3-1.

Table 3-1: Penalty Point Values

FOUL	3
TECHNICAL FOUL	20

3.1.5 Scoring

Points are awarded to ALLIANCES per the details below. Final scores will be assessed five (5) seconds after the ARENA timer displays zero (0) or when all elements come to rest, whichever event happens first.

3.1.5.1 DISC Points

Points are awarded for DISCS SCORED in the GOALS per Table 3-2.

A DISC is considered SCORED in an ALLIANCE'S GOAL if any part of the DISC has crossed through the opening of the GOAL, is in the GOAL at the end of the MATCH, and is not in contact with any ROBOT from that ALLIANCE. GOAL openings are outlined in yellow in Figure 3-2 and Figure 3-3.

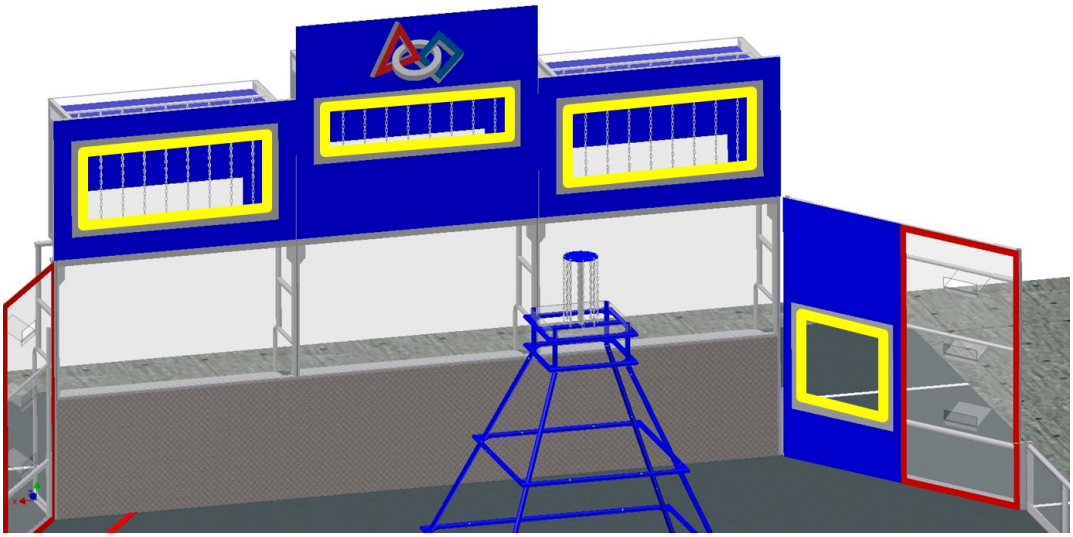

Figure 3-2: LOW, MIDDLE, and HIGH GOAL openings

Additionally, for a DISC to be considered SCORED in an ALLIANCE'S PYRAMID GOAL, it must correspond to the PYRAMID color.

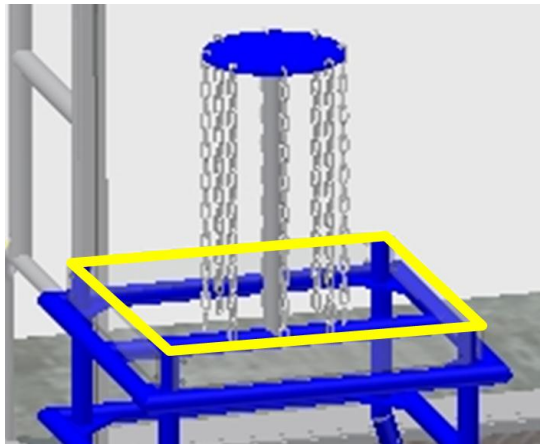

Figure 3-3: PYRAMID GOAL opening

Table 3-2: DISC Point Values

	AUTO	TELEOP
LOW GOAL	2	1
MIDDLE GOAL	4	2
HIGH GOAL	6	3
PYRAMID GOAL	N/A	5

3.1.5.2 CLIMB Points

Points are awarded for the highest Level achieved for every ALLIANCE ROBOT that CLIMBS its PYRAMID. The Level to which a ROBOT has CLIMBED is determined by the lowest point of the ROBOT (in relation to the FIELD) at the point in which final scores are assessed per Section 3.1.5. CLIMB point values and Levels are defined in Figure 3-4.

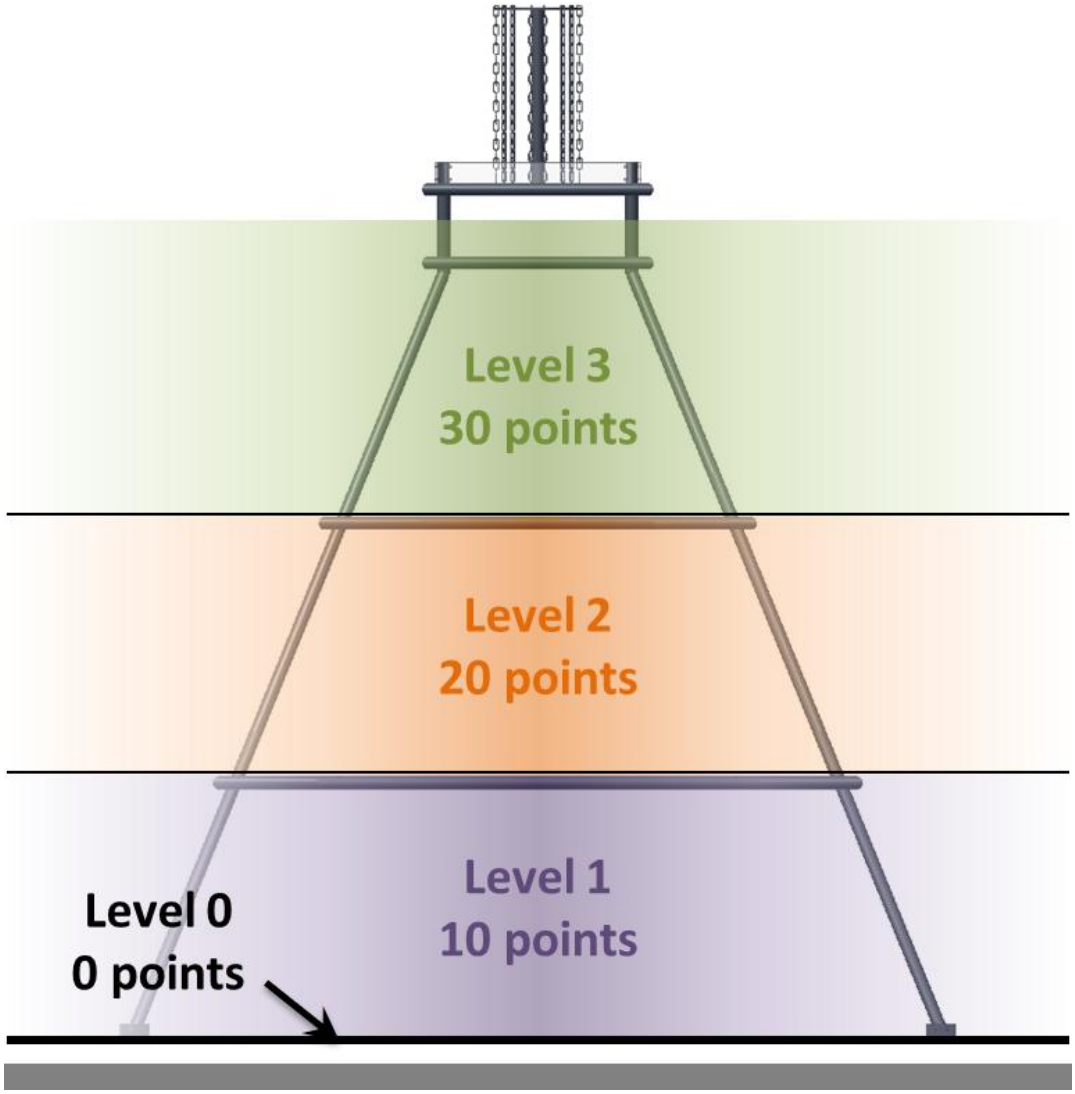

Figure 3-4: PYRAMID Levels

As competition at the *FIRST* Championship is typically different from that during the competition season, *FIRST* may alter the value of CLIMBING at the *FIRST* Championship by up to ten (10) points per Level.

A ROBOT has CLIMBED its PYRAMID if it contacts the PYRAMID and/or the floor (Level 0) in

A. sequential order (Level 0, 1, 2, 3) during ascent and
B. no more than two (2) Levels simultaneously.

If a CLIMB is considered unacceptable (e.g. a ROBOT has touched non-adjacent Levels or more than two (2) Levels at a time), a Referee will indicate a rejected CLIMB by turning the offending ROBOT'S PLAYER STATION LED strings yellow. The ROBOT will be ineligible for CLIMB points unless and until it begins a new CLIMB from the floor, Level 0.

3.2 Game Rules

The rules in this section legislate game play and define the consequences for rule violations.

3.2.1 Safety

3.2.1.1 G01

Teams may only enter the FIELD if the PLAYER STATION LED strings are green.

Violation: YELLOW CARD

3.2.1.2 G02

Teams may not climb on the PYRAMID.

Violation: YELLOW CARD

For the purpose of G02, this is the colloquial use of “climb,” not the ULTIMATE ASCENT use of “CLIMB.”

3.2.1.3 G03

ROBOTS whose operation or design is unsafe are not permitted.

Violation: FOUL & DISABLED. If the issue is due to design: Re-Inspection.

An example of unsafe operation would be uncontrolled motion that cannot be stopped by the DRIVERS.

3.2.1.4 G04

After the MATCH, ROBOTS may only be removed from a PYRAMID under the following conditions:

A. by the TEAM while standing on the floor without special equipment,
B. unpowered,
C. and under the supervision of a *FIRST* Technical Advisor (FTA), FTA Assistant, Referee, or Field Supervisor.

Additionally, if any part of the ROBOT is in Level 3, TEAMS are required to attach a *FIRST* supplied belay line, detailed in Section 2.2.5, to their ROBOT to spot a ROBOT while the TEAM removes it from the PYRAMID.

Violation: YELLOW CARD

3.2.2 Pre-MATCH

3.2.2.1 G05

When placed on the FIELD, each ROBOT must be:

A. in compliance with all ROBOT rules (i.e. have passed Inspection),
B. confined to its STARTING CONFIGURATION,
C. fully supported by the floor, and
D. contacting its PYRAMID.

Violation: If fix is a quick remedy: the MATCH won't start until all requirements are met. If it is not a quick remedy: the ROBOT will be DISABLED and must be re-Inspected.

3.2.2.2 G06

TEAMS may preload White DISCS in or on the ROBOT before the MATCH.

A. If the ROBOT is in contact with any carpet outside its AUTO ZONE, the ROBOT may preload up to three (3) DISCS.
B. Otherwise, the ROBOT may preload up to two (2) DISCS.

Violation: If the situation is not corrected before the start of the MATCH, TECHNICAL FOUL per extra preloaded DISC in or on the ROBOT.

3.2.2.3 G07

TEAMS may not cause significant or repeated delays to the start of a MATCH.

Violation: ROBOT will be DISABLED.

TEAMS are expected to stage their ROBOTS for a MATCH safely and swiftly. TEAM efforts that, either intentionally or unintentionally, delay the start of a MATCH will not be tolerated. Examples of such delays include, but are not limited to:

A. Use of alignment devices such as templates, tape measures, laser pointers, etc. to precisely place and/or align the ROBOT.

B. Late arrival to the FIELD.

C. Being indecisive about where/how to position a ROBOT.

D. Installing BUMPERS, or any ROBOT maintenance or assembly, once on the FIELD.

3.2.2.4 G08

TEAMS may not leave items other than ROBOTS on the FIELD prior to or during the MATCH.

Violation: The MATCH will not start until the situation is corrected.

3.2.2.5 G09

Each TEAM member must be:

A. in the ALLIANCE STATION and
B. behind the STARTING LINE.

Violation: MATCH will not start until the situation is corrected.

3.2.3 General Rules

3.2.3.1 G10

Only TEAM members and their ROBOT may report to the ARENA for a MATCH. TEAM members are limited to:

A. 1 COACH,
B. 2 DRIVERS, and
C. 1 FEEDER

Violation: MATCH will not start until the situation is corrected.

3.2.3.2 G11

The COACH must wear the designated “COACH” button while in the ARENA.

Violation: MATCH will not start until the situation is corrected.

3.2.3.3 G12

ROBOTS may not contact anything outside the FIELD.

Violation: ROBOT will be DISABLED. However, if it occurs during AUTO, and there is no safety concern, the Head Referee will allow a 10-second grace period at the beginning of TELEOP for the ROBOT to correct the situation.

3.2.3.4 G13

ROBOTS may not intentionally detach or leave parts on the FIELD.

Violation: TECHNICAL FOUL

3.2.3.5 G14

The following actions are prohibited with regards to interaction with FIELD elements:

A. grabbing,
B. grasping
C. grappling
D. attaching to,
E. damaging,
F. becoming entangled

Actions A-D do not apply to ROBOT interactions with the PYRAMID.

Violation: FOUL. If the Head Referee determines that further damage is likely to occur, DISABLED. Corrective action (such as eliminating sharp edges, removing the damaging mechanism, and/or re-Inspection) may be required before the ROBOT will be allowed to compete in subsequent MATCHES.

ROBOTS may push or react against any element of the FIELD.

DISCS are expected to undergo a reasonable amount of wear and tear as they are handled by ROBOTS, such as scratches and occasional marks. ROBOTS that gouge, tear off pieces, or routinely mark DISCS will be considered in violation of G14.

3.2.3.6 G15

ROBOTS may not intentionally eject DISCS from gameplay.

Violation: FOUL per DISC.

3.2.3.7 G16

TEAMS and/or ROBOTS may not employ strategies that use DISCS to either aid or inhibit a ROBOT CLIMB.

Violation: TECHNICAL FOUL. If the DISC(S) inhibits an opponent's CLIMB attempt, the opponent ROBOT'S ALLIANCE is awarded points for a successful Level 3 CLIMB.

3.2.3.8 G17

An ALLIANCE may not put DISCS in their opponents' PYRAMID GOAL.

Violation: TECHNICAL FOUL per DISC.

3.2.3.9 G18

All Teams must be civil towards other Teams, competition personnel, and event attendees.

Violation: Potential RED CARD for violations in the ARENA.

Teams will not receive RED/YELLOW CARDS for off-ARENA actions; however, designated competition personnel will hold them accountable for their off-ARENA actions.

3.2.3.10 G18-1

Strategies aimed solely at forcing the opposing ALLIANCE to violate a rule are not in the spirit of FRC and are not allowed. Rule violations forced in this manner will not result in assessment of a penalty on the target ALLIANCE .

Violation: TECHNICAL FOUL

3.2.4 AUTO Rules

3.2.4.1 G19

During AUTO, a ROBOT may not cross the CENTER LINE such that it is no longer in contact with the carpet on its starting half of the FIELD.

Violation: FOUL. If contact with an opponent ROBOT, TECHNICAL FOUL.

3.2.4.2 G20

During AUTO, TEAMS must remain behind the STARTING LINE.

Violation: FOUL. If contact with the OPERATOR CONSOLE, TECHNICAL FOUL.

Exceptions will be made for person or equipment safety situations (e.g. catching a falling OPERATOR CONSOLE).

3.2.4.3 G21

During AUTO, any control devices worn or held by the DRIVERS must be disconnected from the OPERATOR CONSOLE and not connected until TELEOP.

Violation: FOUL

3.2.5 ROBOT Actions

3.2.5.1 G22

ROBOT height (as defined in relation to the ROBOT) must be restricted as follows during the MATCH:

A. If in contact with the carpet in its AUTO ZONE and/or its PYRAMID, ? 84 in.
B. Otherwise, ? 60 in.

Violation: FOUL. If continuous or repeated violations, TECHNICAL FOUL.

3.2.5.2 G23

A ROBOT'S horizontal dimensions may never exceed a 54 in. diameter vertical cylinder.

Violation: FOUL. If continuous or repeated violations, TECHNICAL FOUL.

In other words, a ROBOT must always fit inside a cylinder with a diameter of 54 in. This method for restricting ROBOT size requires extra diligence if a ROBOT'S geometric center shifts as various appendages are extended and retracted.

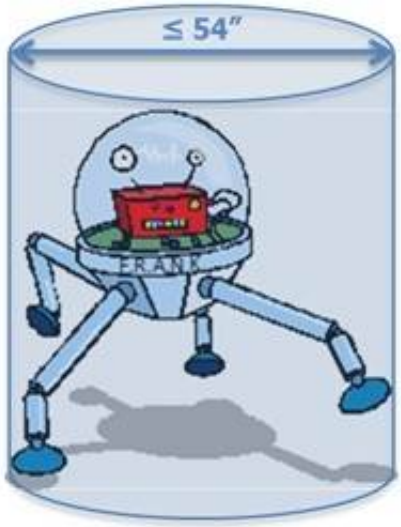

Figure 3-5: ROBOT inside 54 in. diameter cylinder

3.2.5.3 G24

ROBOTS may not actively control more than four (4) DISCS at any one time.

Violation: FOUL per extra DISC

Moving or positioning a DISC to gain advantage is considered “active control.”

Examples of “active control” include

A. “carrying” (holding DISCS in or on the ROBOT),

B. “herding” (intentionally pushing or impelling DISCS to a desired location or direction), and

C. “trapping” (pressing one or more DISCS against a FIELD element in an attempt to shield them).

Examples of DISC interaction that are not “active control” are

D. “bulldozing” (inadvertently coming in contact with DISCS that happen to be in the path of the ROBOT as it moves about the FIELD) and

E. “deflecting” (being hit by a propelled DISC that bounces or rolls off the ROBOT).

A DISC that becomes unintentionally lodged on a ROBOT will be considered actively controlled by the ROBOT. It is important to design your ROBOT so that it is impossible to inadvertently or intentionally control more than four (4) DISCS at a time.

3.2.5.4 G25

ROBOTS on the same ALLIANCE may not blockade the FIELD in an attempt to stop the flow of the MATCH. This rule has no effect on individual ROBOT-ROBOT interaction.

Violation: TECHNICAL FOUL

3.2.5.5 G26

ROBOTS may not intentionally fall down or tip over to block the FIELD.

Violation: TECHNICAL FOUL

3.2.5.6 G27

ROBOTS may not contact or otherwise interfere with their opponents' PYRAMID. Inconsequential contact will not be penalized.

Violation: TECHNICAL FOUL. If an opponent's CLIMB is affected,

A. *RED CARD, and*
B. *Each affected opponent ROBOT will be awarded points for a successful Level 3 CLIMB.*

3.2.6 ROBOT-ROBOT Interaction

3.2.6.1 G28

Strategies aimed at the destruction or inhibition of ROBOTS via attachment, damage, tipping, or entanglement of ROBOTS are not in the spirit of the FRC and are not allowed.

Violation: TECHNICAL FOUL and YELLOW CARD

For example, use of wedge-like MECHANISM to flip ROBOTS would be considered a violation of G28.

3.2.6.2 G29

Deliberate or damaging contact with an opponent ROBOT on or inside its FRAME PERIMETER is not allowed.

Violation: TECHNICAL FOUL

High speed accidental collisions may occur during the MATCH and are expected. ROBOTS extend elements outside of the FRAME PERIMETER at their own risk; no penalties will be assigned for contact between two such extended elements.

A ROBOT with an element outside its FRAME PERIMETER may be penalized under this rule if it appears they are using that element to purposefully contact another ROBOT inside its FRAME PERIMETER. Regardless of intent, a ROBOT with an element outside its FRAME PERIMETER that causes damage to another ROBOT inside of its FRAME PERIMETER will be penalized.

3.2.6.3 G30

Regardless of who initiates the contact, a ROBOT may not contact an opponent ROBOT

A. contacting its PYRAMID or
B. touching the carpet in its LOADING ZONE.

Violation: FOUL. If purposeful or consequential, TECHNICAL FOUL. If an opponent's CLIMB is affected, each affected opponent ROBOT will be awarded points for a successful Level 3 CLIMB.

3.2.6.4 G31

An ALLIANCE may not pin an opponent ROBOT for more than five (5) seconds. A ROBOT will be considered pinned until the ROBOTS have separated by at least six (6) ft. The pinning ROBOT(S) must then wait for at least three (3) seconds before attempting to pin the same ROBOT again. Pinning is transitory through other objects.

Violation: TECHNICAL FOUL

If the pinned ROBOT chases the pinning ROBOT upon retreat, the pinning ROBOT will not be penalized per G31, and the pin will be considered complete.

3.2.6.5 G32

Fallen (i.e. tipped over) ROBOTS attempting to right themselves (either by themselves or with assistance from an ALLIANCE partner) have one (1) ten (10)-second grace period per fallen ROBOT in which the fallen ROBOT may not be contacted by an opposing ROBOT.

This protection lasts for either ten (10) seconds or until the protected ROBOT has completed the righting operation, whichever comes first.

Violation: If inadvertent, FOUL. If intentional, TECHNICAL FOUL.

Once the 10-second grace period for righting a fallen ROBOT has expired, opposing ROBOTS may interact with a fallen ROBOT with no FOUL assessed as long as G28 is not violated (as applied to the fallen over ROBOT).

3.2.6.6 G33

A ROBOT may only be supported (fully or partially) by another ROBOT if one of the ROBOTS is in contact with a PYRAMID.

Violation: If extended, strategic, or repeated, TECHNICAL FOUL.

3.2.7 Human Actions

3.2.7.1 G34

Only FEEDERS may touch DISCS. Inadvertent or inconsequential contact by others will not be penalized.

Violation: FOUL

3.2.7.2 G35

DISCS may be fed onto the FIELD only under the following circumstances:

A. during TELEOP through the FEEDER SLOTS and
B. during the last thirty (30) seconds of TELEOP over the FEEDER STATIONS.

Violation: FOUL

3.2.7.3 G36

During the MATCH, TEAMS must be within their ALLIANCE STATION. Exceptions will be granted for inadvertent or inconsequential infractions and in cases concerning safety.

Violation: FOUL

3.2.7.4 G37

TEAMS may not extend any body part into the FIELD or contact any ROBOT at any time during the MATCH.

Violation: TECHNICAL FOUL

3.2.7.5 G38

During a MATCH, the ROBOT shall be operated solely by the DRIVERS of that TEAM.

Violation: TECHNICAL FOUL

Exceptions may be made before a MATCH for major conflicts, e.g. religious holidays, major testing, transportation issues, etc.

3.3 Revision History

Date	Section	Change
1/8/13	3.1.5.2	Added detail on when CLIMB points are assessed
1/8/13	3.2.1	Corrected Section reference in G04
1/8/13	3.2.6	Added provision for awarding CLIMB points if opponent CLIMB is affected
1/8/13	3.1.5.2	Corrected Section reference

4 The Robot

***FIRST*®, the *FIRST*® logo, *FIRST*® Robotics Competition, FRC ®, Coopertition®, and Gracious Professionalism® are registered trademarks, and Sport for the Mind™ and ULTIMATE ASCENT℠ are common law trademarks, of the United States Foundation for Inspiration and Recognition of Science and Technology (*FIRST*®). ©2013*FIRST*. All rights reserved.**

This section of the *2013 FRC® Game Manual* presents legislation relevant to the construction of a 2013 *FIRST*® Robotics Competition (FRC) ROBOT. ROBOTS will be Inspected at each FRC event to confirm compliance before being allowed to compete, per *Section 5.5.2* in *The Tournament, Eligibility and Inspection* of the *2013 FRC Game Manual*.

4.1 ROBOT Rules

The rules listed below explicitly address what and how parts and materials may be used on a 2013 FRC ROBOT. There are many reasons for the structure of the rules, including safety, reliability, parity, creation of a reasonable design challenge, adherence to professional standards, impact on the competition, compatibility with the Kit of Parts (KOP), etc. When reading these rules, please use technical common sense (engineering thinking) rather than "lawyering" the interpretation and splitting hairs over the precise wording in an attempt to find loopholes. Try to understand the reasoning behind a rule.

In addition, another intent of these rules is to have all energy sources and active actuation systems on the ROBOT (e.g. batteries, compressors, motors, servos, cylinders, and their controllers) drawn from a well-defined set of options. This is to ensure that all Teams have access to the same actuation resources, and to ensure that the Inspectors are able to accurately assess the legality of a given part.

Teams may be asked to provide documentation proving legality of non-2013 KOP items during Inspection where a Rule specifies limits for a legal part (e.g. pneumatic components, current limits, COTS electronics, etc.).

Some of these rules make use of English unit requirements for parts. If your team has a question about a metric-equivalent part's legality, please e-mail your question to frcparts@usfirst.org for an official ruling. To seek approval for alternate devices for inclusion in future FRC seasons, please contact frcparts@usfirst.org with item specifications.

Teams should acknowledge the support provided by the corporate Sponsors and Mentors with an appropriate display of their school and Sponsors names and logos (or the name of the supporting youth organization, if appropriate).

4.1.1 General ROBOT Design

4.1.1.1 R01

Each registered FRC team may enter only one (1) ROBOT into the 2013 FRC. The ROBOT must be built by the FRC Team to perform specific tasks when competing in ULTIMATE ASCENT. The ROBOT must include all of the basic systems required to be an active participant in the game – power, communications, control, mobility, and actuation. The ROBOT implementation must obviously follow a design approach intended to play ULTIMATE ASCENT (e.g. a box of unassembled parts placed on the FIELD, or a ROBOT designed to play a different game would not satisfy this definition).

4.1.1.2 R02

The ROBOT must have a FRAME PERIMETER, contained within the BUMPER ZONE, that is comprised of fixed, non-articulated structural elements of the ROBOT. Minor protrusions no greater than ¼ in. such as bolt heads, fastener ends, and rivets are not considered part of the FRAME PERIMETER.

To determine the FRAME PERIMETER, wrap a piece of string around the ROBOT at the BUMPER ZONE described in R25. The string describes this polygon.

Note: to permit a simplified definition of the FRAME PERIMETER and encourage a tight, robust connection between the BUMPERS and the FRAME PERIMETER, minor

protrusions such as bolt heads, fastener ends, rivets, etc. are excluded from the determination of the FRAME PERIMETER.

4.1.1.3 R03

The ROBOT must satisfy the following size constraints:

A. total length of the FRAME PERIMETER sides may not exceed 112 in. (see Figure 4-1 for examples),
B. PLAYING CONFIGURATION horizontal dimensions may never exceed a 54 in. diameter vertical cylinder (see G23), and
C. height may never exceed 84 in. tall.

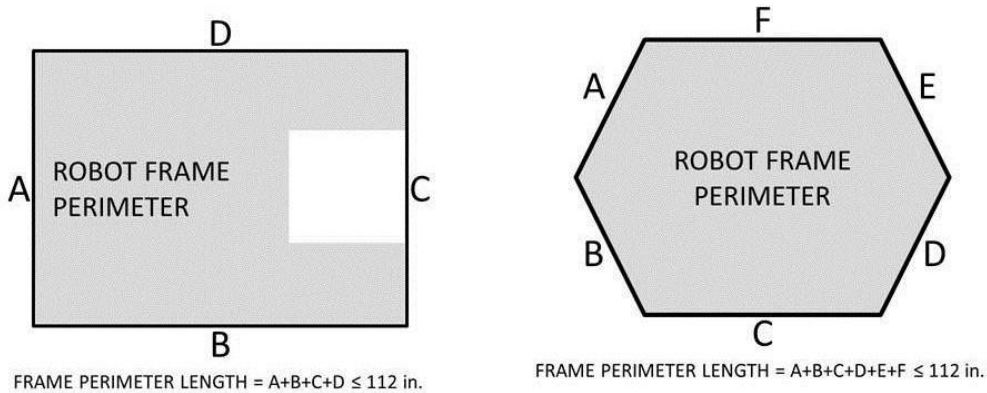

Figure 4-1: FRAME PERIMETER Length Calculations

Consider G22 restricting ROBOT height on various parts of the FIELD during the MATCH when designing and building the ROBOT.

Expect to have to demonstrate a ROBOT'S ability to constrain itself per B above during Inspection. PLAYING CONFIGURATION constraints may be implemented with either hardware or software.

4.1.1.4 R04

In the STARTING CONFIGURATION, no part of the ROBOT may extend outside the vertical projection of the FRAME PERIMETER, with the exception of minor protrusions such as bolt heads, fastener ends, rivets, etc.

If a ROBOT is designed as intended and pushed up against a vertical wall (in STARTING CONFIGURATION and with BUMPERS removed), only the FRAME PERIMETER (or minor protrusions) will be in contact with the wall.

4.1.1.5 R05

The ROBOT weight may not exceed 120 lbs. When determining weight, the basic ROBOT structure and all elements of all additional MECHANISMS that might be used in different configurations of the ROBOT shall be weighed together.

For the purposes of determining compliance with the weight limitations, the items listed below are not included in the weight assessment:

A. the ROBOT battery and its associated half of the Anderson cable quick connect/disconnect pair (including no more than 12 in. of cable per leg, the associated cable lugs, connecting bolts, and insulation) and
B. BUMPERS (including BUMPER covers, if appropriate).

4.1.1.6 R06

Traction devices may not have surface features such as metal, sandpaper, hard plastic studs, cleats, or similar attachments. Traction devices include all parts of the ROBOT that are designed to transmit any propulsive and/or braking forces between the ROBOT and FIELD carpet.

4.1.1.7 R07

ROBOTS must allow removal of DISCS from the ROBOT and the ROBOT from FIELD elements while disabled and powered off.

ROBOTS will not be re-enabled after the MATCH, so Teams must be sure that DISCS and ROBOTS can quickly, simply, and safely be removed. Teams may be asked to demonstrate this during Inspection.

4.1.2 Safety & Damage Prevention

4.1.2.1 R08

ROBOT parts shall not be made from hazardous materials, be unsafe, cause an unsafe condition, or interfere with the operation of other ROBOTS.

Examples of items that will violate R08 include (but are not limited to):

A. Shields, curtains, or any other devices or materials designed or used to obstruct or limit the vision of any drivers and/or coaches and/or interfere with their ability to safely control their ROBOT

B. Speakers, sirens, air horns, or other audio devices that generate sound at a level sufficient to be a distraction

C. Any devices or decorations specifically intended to jam or interfere with the remote sensing capabilities of another ROBOT, including vision systems, acoustic range finders, sonars, infrared proximity detectors, etc. (e.g. including imagery on your ROBOT that, to a reasonably astute observer, mimics the VISION TARGET)

D. Exposed lasers other than Class I.

E. Flammable gasses

F. Any device intended to produce flames or pyrotechnics

G. Hydraulic fluids or hydraulic components

Teams should provide MSD Sheets for any materials they use that might be considered questionable during ROBOT Inspection.

4.1.2.2 R09

Protrusions from the ROBOT and exposed surfaces on the ROBOT shall not pose hazards to the ARENA elements or people.

If the ROBOT includes protrusions that form the “leading edge” of the ROBOT as it drives and have a surface area of less than 1 in.^{2}, it will invite detailed Inspection. For example, forklifts, lifting arms, or grapplers may be carefully Inspected for these hazards.

4.1.2.3 R10

Teams must supply at least two (2) attachment points for the belaying device (see Section 2.2.5) to mount to their ROBOTS. Attachment points must be:

A. easily accessible after the ROBOT has CLIMBED the PYRAMID,
B. on opposite sides of the ROBOT,
C. located near the ROBOT’S balance point, and
D. made from exposed structural members that will allow a rope to be wrapped around it or two eyelets (McMaster PN3014T45 or similar) mounted to the frame. Opening of the eyelets must be at least ¾ in. in diameter.

4.1.3 Budget Constraints

4.1.3.1 R11

The total cost of all items on the ROBOT shall not exceed $4000 USD. All costs are to be determined as explained in *Section 4.1.3: Budget Constraints*. Exceptions are as follows:

A. individual fasteners, adhesives, and lubricants, that are less than $1 each and

B. Kit of Parts (KOP) items

Teams should be prepared to disclose to Inspectors the cost of any non-KOP item and the total cost of the ROBOT.

Per T7, teams must be prepared to display a Bill of Materials (BOM) to Inspectors during Inspection. The BOM may be displayed in either printed or electronic form.

4.1.3.2 R12

No individual item shall have a value that exceeds $400 USD. The total cost of COMPONENTS purchased in bulk may exceed $400 as long as the cost of an individual COMPONENT does not exceed $400.

4.1.3.3 R13

Individual COMPONENTS or MECHANISMS, not excluded in R11, that are retrieved from previous ROBOTS and used on 2013 ROBOTS must have their undepreciated cost included in the 2013 ROBOT BOM and applied to the overall cost assessment.

4.1.3.4 R14

The BOM cost of each non-KOP item must be calculated based on the unit fair market value for the material and/or labor, except for labor provided by team members (including sponsor employees who are members of the team) and shipping.

Example: A Team orders a custom bracket made by a company to the Team's specification. The company's material cost and normally charged labor rate apply.

Example: A Team receives a donated sensor. The company would normally sell this item for $52, which is therefore its fair market value.

Example: Special price discounts from National Instruments and other FRC Suppliers are being offered to all *FIRST* Teams. The discounted purchase price of items from these sources may be used in the additional parts accounting calculations.

Example: A Team purchases steel bar stock for $10 and has it machined by a local machine shop. The machine shop is not considered a team Sponsor, but donates two (2) hours of expended labor anyway. The Team must include the estimated normal cost of the labor as if it were paid to the machine shop, and add it to the $10.

Example: A Team purchases steel bar stock for $10 and has it machined by a local machine shop that is a recognized Sponsor of the Team. If the machinists are considered members of the Team, their labor costs do not apply. The total applicable cost for the part would be $10.

It is in the best interests of the Teams and *FIRST* to form relationships with as many organizations as possible. Teams are encouraged to be expansive in recruiting and including organizations in their team, as that exposes more people and organizations to *FIRST*. Recognizing supporting companies as Sponsors of, and members in, the Team is encouraged, even if the involvement of the Sponsor is solely through the donation of fabrication labor.

Example: A Team purchases a 4 by 4 ft sheet of aluminum, but only uses a piece 10 by 10 in. on their ROBOT. The Team identifies a source that sells aluminum sheet in 1 by 1 ft pieces. The Team may cost their part on the basis of a 1 by 1 ft piece, even though they cut the piece from a larger bulk purchase. They do not have to account for the entire 4 by 4 ft bulk purchase item.

4.1.3.5 R15

If a COTS item is part of a modular system that can be assembled in several possible configurations, then each individual module must fit within the price constraints defined in R12.

If the modules are designed to assemble into a single configuration, and the assembly is functional in only that configuration, then the total cost of the complete assembly including all modules must fit within the price constraints defined in R12.

In summary, if a VENDOR sells a system or a kit, a team must use the entire system/kit Fair Market Value and not the value of its COMPONENT pieces.

Example1: VENDOR A sells a gearbox that can be used with a number of different gear sets, and can mate with two different motors they sell. A team purchases the gearbox, a gear set, and a motor (which are not offered together as an assembly or kit), then assembles them together. Each part is treated separately for the purpose of BOM costing, since the purchased pieces can each be used in various configurations.

Example2: VENDOR B sells a robotic arm assembly that the team wants to use. However, it costs $700, so they cannot use it. The Vendor sells the “hand”, “wrist” and “arm” as separate assemblies, for $200 each. A team wishes to purchase the three components separately, then reassemble them. This would not be legal, as they are really buying and using the entire assembly, which has a Fair Market Value of $700.

4.1.4 Fabrication Schedule

4.1.4.1 R16

ROBOT elements, including software, that are designed or created before Kickoff are not permitted, unless they are publicly available prior to Kickoff.

Please note that this means that FABRICATED ITEMS from ROBOTS entered in previous *FIRST* competitions may not be used on ROBOTS in the 2013 FRC. Before the

formal start of the FRC Build Season, Teams are encouraged to think as much as they please about their ROBOTS. They may develop prototypes, create proof-of-concept models, and conduct design exercises. Teams may gather all the raw stock materials and COTS COMPONENTS they want.

Example 1: A Team designs and builds a two-speed shifting transmission during the fall as a training exercise. After Kickoff, they utilize all the design principles they learned in the fall to design their ROBOT. To optimize the transmission design for their ROBOT, they improve the transmission gear ratios and reduce the size, and build two new transmissions, and place them on the ROBOT. All parts of this process are permitted activities.

Example 2: The same Team realizes that the transmission designed and built in the fall perfectly fits their need for a transmission to drive the ROBOT arm. They build an exact copy of the transmission from the original design plans, and bolt it to the ROBOT. This would be prohibited, as the transmission – although fabricated during the competition season – was built from detailed designs developed prior to Kickoff.

Example 3: A Team developed an omni-directional drive system for the 2011 competition. Over the summer of 2011 they refined and improved the control software (written in C) to add more precision and capabilities. They decided to use a similar system for the 2013 competition. They copied large sections of unmodified code over into the control software of the new ROBOT (also written in C). This would be a violation of the schedule constraint, and would not be allowed.

Example 4: The same Team decides to use LabVIEW as their software environment for 2013. Following Kickoff, they use the previously-developed C code as a reference for the algorithms and calculations required to implement their omni-directional control solution. Because they developed new LabVIEW code as they ported over their algorithms, this would be permitted.

Example 5: A different Team develops a similar solution during the fall, and plans to use the developed software on their competition ROBOT. After completing the software, they post it in a generally accessible public forum and make the code available to all Teams. Because they have made their software publicly available before Kickoff, they can use it on their ROBOT.

4.1.4.2 R17

The ROBOT (including items intended for use during the competition in alternative configurations of the ROBOT, excluding items permitted per R21) must be bagged or crated (as appropriate for your event), and out of Team hands by Stop Build Day, February 19, 2013 (refer to the *FRC Administrative Manual, Section 5* for more details).

4.1.4.3 R18

Teams must stay “hands-off” their ROBOT during the following time periods:

A. from Stop Build Day until their first event,
B. during the period(s) between their events, and

C. outside of Pit hours while attending events.

Additional time is allowed as follows:

D. There are no restrictions on when software may be developed.
E. On days a team is not attending an event, they may continue development of any items permitted per R21, but must do so without interfacing with the ROBOT.

Teams attending 2-day events may access their ROBOTS per the rules defined in the *Administrative Manual, Section 5.6, ROBOT Access Period - for Teams Attending 2-Day Events*.

4.1.5 Material Utilization

4.1.5.1 R19

COTS items from ROBOTS entered in previous FRC competitions that are no longer commercially available may be used only if they are functionally equivalent to the original condition as delivered from the VENDOR.

For example, a part that has non-functional label markings added would be permitted, but a part that has device-specific mounting holes added would be prohibited.

4.1.5.2 R20

Lubricants may be used only to reduce friction within the ROBOT. Lubricants may not contaminate the ARENA or other ROBOTS.

4.1.5.3 R21

Teams may bring a maximum of 30 lbs of FABRICATED ITEMS to each event to be used to repair and/or upgrade their ROBOT. The OPERATOR CONSOLE, BUMPERS, and any ROBOT battery assemblies (as described in R5-A) are exempt from this limit.

4.1.6 BUMPER Rules

4.1.6.1 R22

ROBOTS are required to use BUMPERS to protect all outside corners of the FRAME PERIMETER. For adequate

protection, at least 8 in. of BUMPER must be placed on each side of each outside corner (see Figure 4-2).

The dimension defined in R22 is measured along the FRAME PERIMETER. The portion of the BUMPER that extends into the corner is not included in the 8 in. requirement.

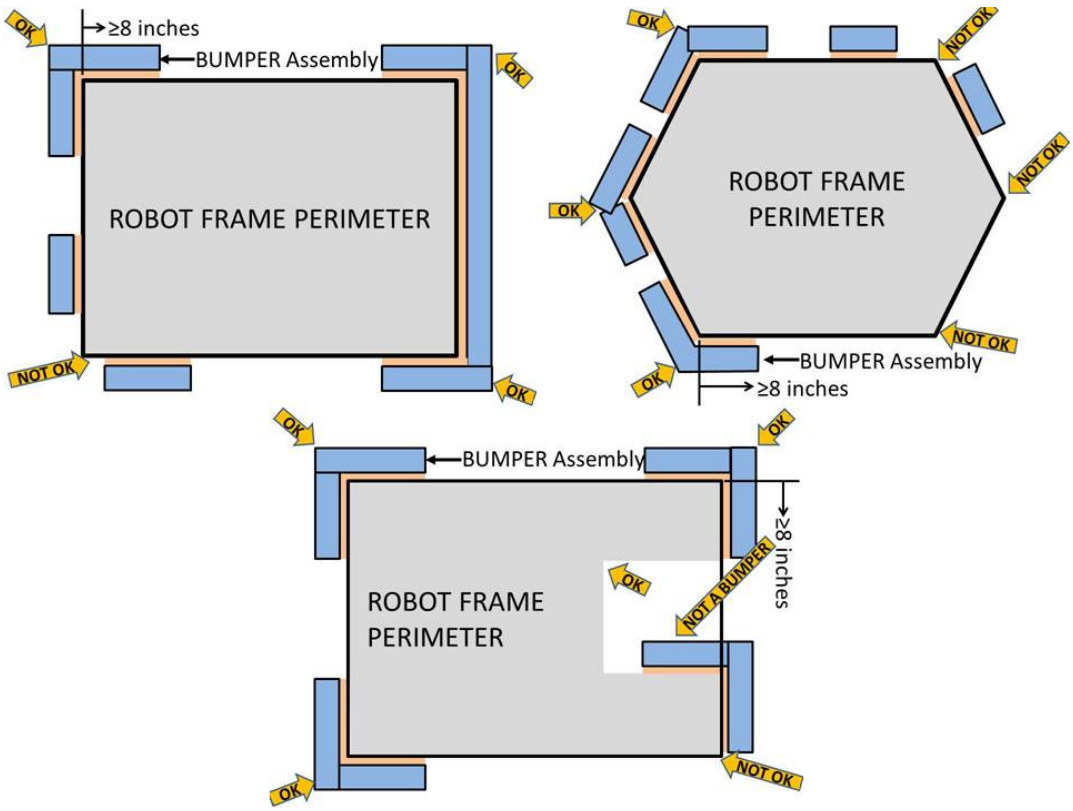

Figure 4-2: BUMPER Corner Examples

4.1.6.2 R23

Each set of BUMPERS (including any fasteners and/or structures that attach them to the ROBOT) must weigh no more than 20 lbs.

If a multi-part attachment system is utilized (e.g. interlocking brackets on the ROBOT and the BUMPER), then the elements permanently attached to the ROBOT will be considered part of the ROBOT, and the elements attached to the BUMPERS will be considered part of the BUMPER. Each element must satisfy all applicable rules for the relevant system.

4.1.6.3 R24

BUMPERS must be constructed as follows (see Figure 4-4):

A. be backed by ¾ in. (nominal) thick by 5 in. (± ½ in) tall plywood or solid, robust wood.

Particle board or chipboard is not likely to survive the rigors of FRC gameplay and thus not compliant with R24-A.

B. hard BUMPER parts (e.g. plywood, fasteners, etc) may not extend more than 1 in. beyond the end of the FRAME PERIMETER (see Figure 4?3and Figure 4?4).

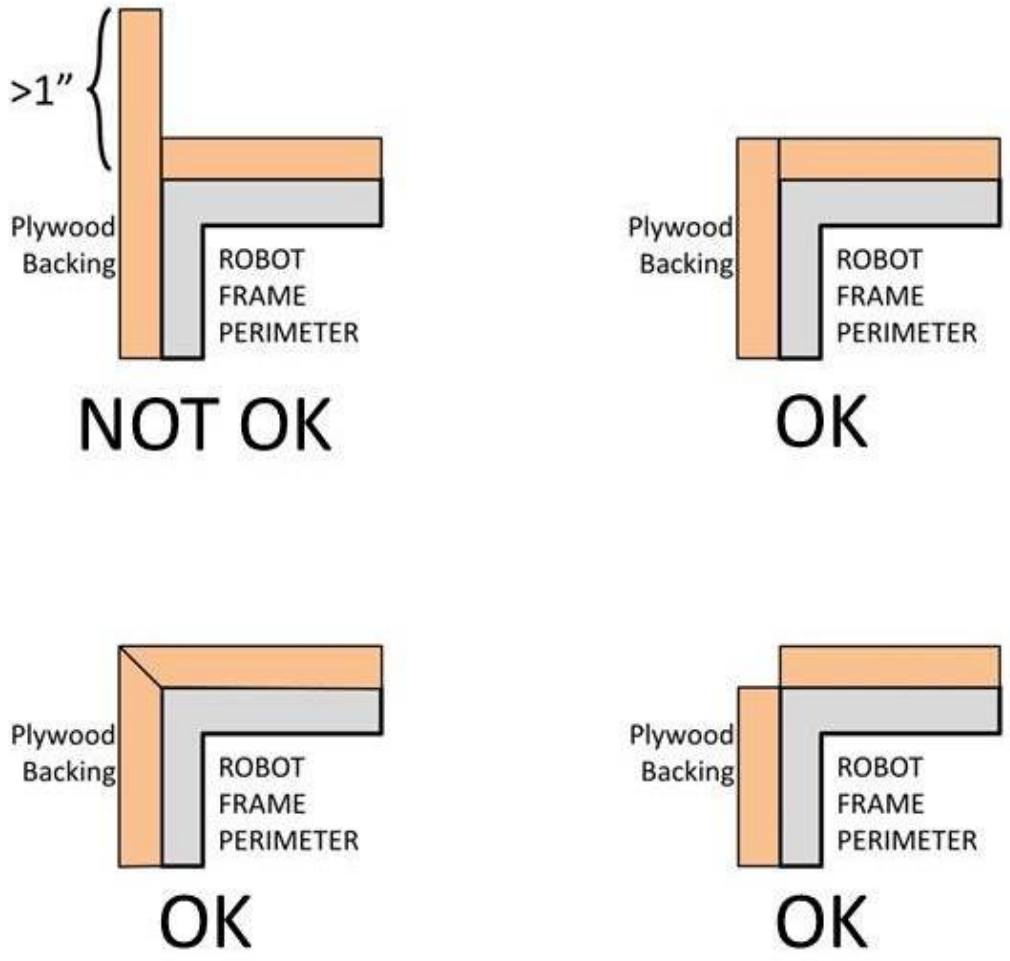

Figure 4-3: Hard Parts of BUMPER Corners

C. use a stacked pair of approximately 2 ½ in. round, petal, or hex “pool noodles” (solid or hollow) as the BUMPER cushion material (see Figure 4-4). Cushion material may extend up to 2 ½ in. beyond the end of the plywood (see Figure 4-2).
D. be covered with a rugged, smooth cloth.

Silk or bedding are not considered rugged materials. 1000D Cordura is recommended.

The cloth must completely enclose all exterior surfaces of the wood and pool noodle material when the BUMPER is installed on the ROBOT. The fabric covering the BUMPERS must be a solid Red or Blue in color. The only markings permitted on the BUMPER fabric cover are the Team number (see Rule R31).

Visually, the Red or Blue must be as close to the corresponding color in the *FIRST* logo

as reasonable (i.e. to a reasonably astute observer, they appear similar).

E. must attach to the FRAME PERIMETER of the ROBOT with a rigid fastening system to form a tight, robust connection to the main structure/frame (e.g. not attached with hook-and-loop or tie-wraps). The attachment system must be designed to withstand vigorous game play. All removable fasteners (e.g. bolts, locking pins, pip-pins, etc.) will be considered part of the BUMPERS.

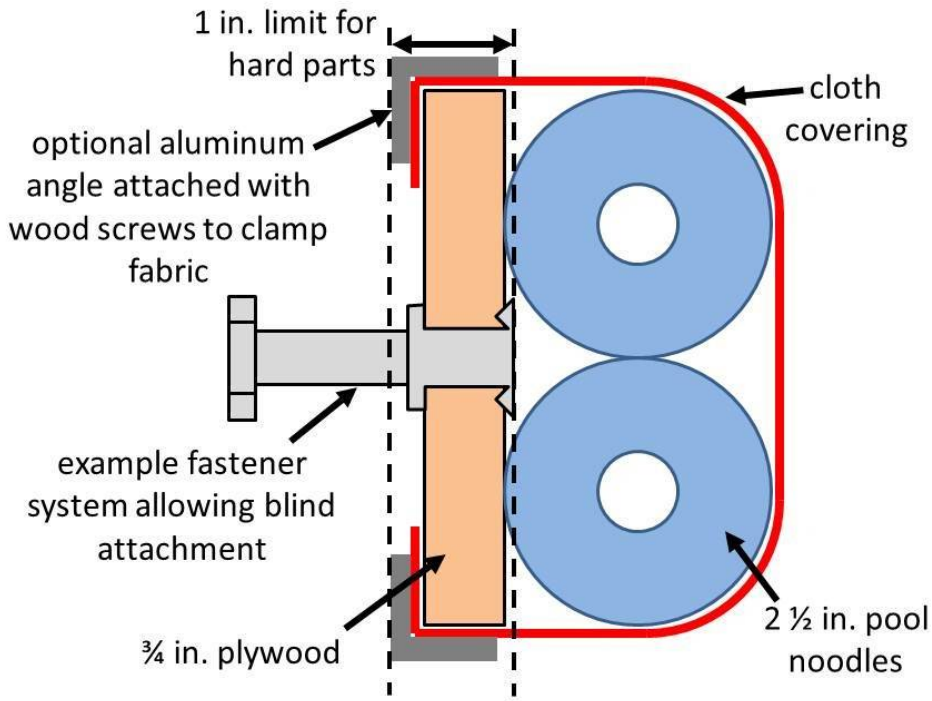

Figure 4-4: BUMPER Cross Section

4.1.6.4 R25

BUMPERS must be located entirely within the BUMPER ZONE, which is between 2 and 10 in. from the floor, in reference to the ROBOT standing normally on a flat floor.

4.1.6.5 R26

BUMPERS may not be articulated (relative to the FRAME PERIMETER).

4.1.6.6 R27

Corner joints between BUMPERS must be filled with pool noodle material. Examples of implementation are shown in Figure 4-5.

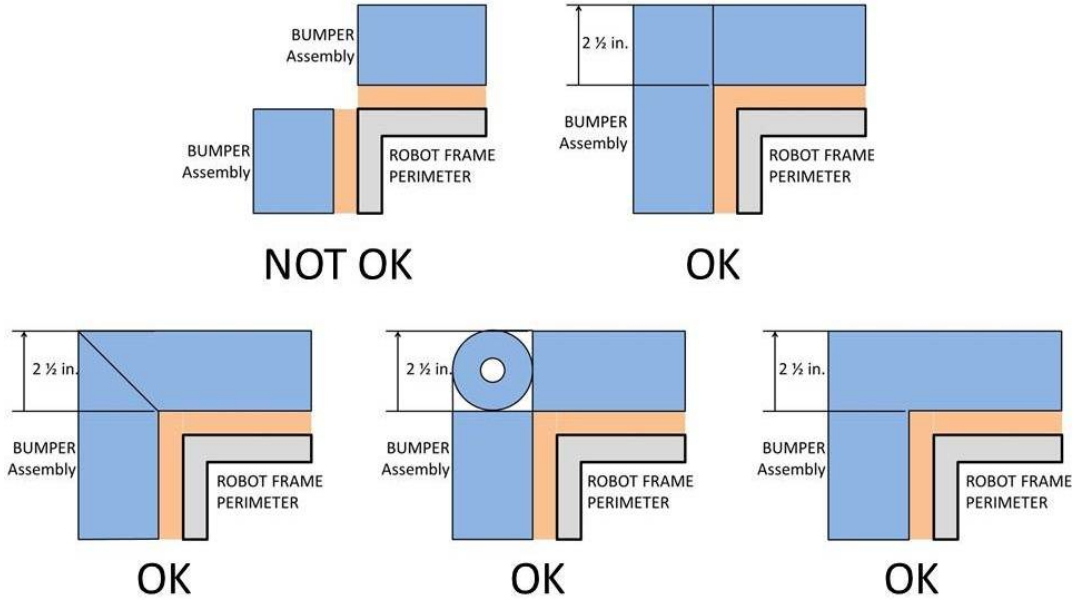

Figure 4-5: Soft Parts of BUMPER Corners

4.1.6.7 R28

BUMPERS (the entire BUMPER, not just the cover) must be designed for quick and easy installation and removal.

As a guideline, BUMPERS should be removable by two (2) people in fewer than five (5) minutes.

4.1.6.8 R29

BUMPERS must be supported by the structure/frame of the ROBOT (see Figure 4-6). To be considered supported:

A. a minimum of 1 in. at each end of the BUMPER must be backed by the FRAME PERIMETER,
B. the gap between the backing material and the frame must not be greater than ¼ in., and
C. no section of BUMPER greater than 8 in. may be unsupported.

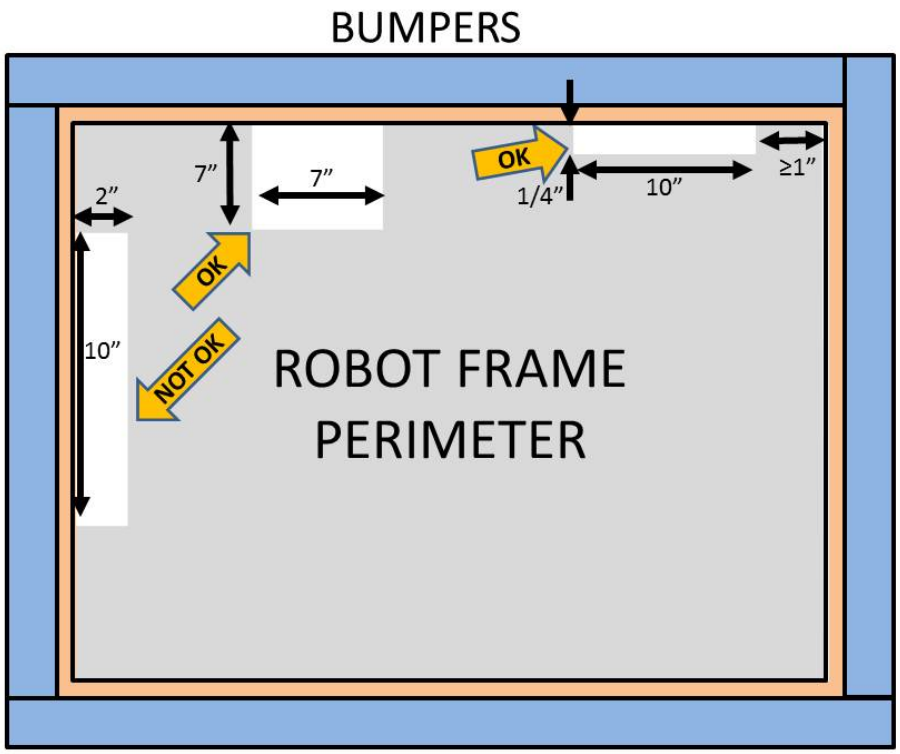

Figure 4-6: BUMPER Support Examples

4.1.6.9 R30

Each ROBOT must be able to display Red or Blue BUMPERS to match their ALLIANCE color, as assigned in the MATCH schedule distributed at the event (reference Section 5.3.2).

4.1.6.10 R31

Team numbers must be displayed on the BUMPERS and meet the following criteria:

A. consist of numerals at least 4 in. high, at least ½ in. in stroke width, and be either white in color or outlined in white
B. may not wrap around a corner of the FRAME PERIMETER
C. be positioned around the ROBOT such that an observer walking around the perimeter of the ROBOT can unambiguously tell the Team’s number from any point of view.

There is no prohibition against splitting Team numbers onto different sections of BUMPER. The intent is that the Team’s number is clearly visible and unambiguous so that Judges, Referees, Announcers, and other Teams can easily identify competing ROBOTS.

4.1.7 Motors & Actuators

4.1.7.1 R32

The only motors and actuators permitted on 2013 FRC ROBOTS include the following:

Table 4-1: Legal Motors

Motor Name	**Part Numbers Available**	**Max Qty Allowed**
CIM	FR801-001 M4-R0062-12 AM802-001A 217-2000 PM25R-44F-1005 PM25R-45F-1004 PMR25R-45F-1003 PMR25R-44F-1005	6
BaneBots	M7-RS775-12 M7-RS775-18 M5-RS550-12 M5-RS550-12-B M5-RS545-12 M5-RS540-12 M3-RS395-12 M3-RS390-12	4
AndyMark 9015	am-0912	4
Denso Throttle Control	AE235100-0160	4
VEX BAG and/or mini-CIM	217-3351 217-3371	4
AndyMark PG	am-2161 am-2194	3
Window Motors	262100-3030 262100-3040 Various from *FIRST*® Choice	2

VEX 2-wire Motor 393	276-2177	2
Snow Blower Motor	am-2235	1
Electrical solenoid actuators, no greater than 1 in. stroke and rated electrical input power no greater than 10 watts (W) continuous duty at 12 volts (VDC)		Unlimited
Drive motors or fans that are part of a motor controller or COTS computing device		Unlimited
Fans included in the 2013 Kickoff Kit, *FIRST*® Choice, or as a Talon motor controller accessory		Unlimited
COTS servos with a maximum power rating of 4W each at 6VDC Per the Servo Industry, Servo Max Power Rating = (Stall Torque) X (No Load Speed)		Unlimited

This is the total number of each motor a Team may use on their ROBOT, not the quantity per part number. For example, each team may use up to six (6) CIM motors on their ROBOT, regardless of the quantity or combination of each individual part number used.

Given the extensive amount of motors allowed on the ROBOT, Teams are encouraged to consider the total power available from the ROBOT battery during the design and build of the ROBOT. Stalling many motors at the same time could lead to drops in ROBOT battery voltage that will result in loss of power to core Control System components.

4.1.7.2 R33

The integral mechanical and electrical system of any motor may not be modified. Motors, servos, and electric solenoids used on the ROBOT shall not be modified in any way, except as follows:

A. The mounting brackets and/or output shaft/interface may be modified to facilitate the physical connection of the motor to the ROBOT and actuated part.
B. The electrical input leads may be trimmed to length as necessary.
C. The locking pins on the window motors (P/N: 262100-3030 and 262100-3040) may be removed.
D. The connector housings on the window motors (P/N: 262100-3030 and 262100-3040) may be modified to facilitate lead connections.
E. The Integrated Encoder Module (P/N: 276-1321) may be installed on the VEX 2-wire Motor 393 (P/N 276-2177).
F. The VEX 2-wire Motor 393 (P/N: 276-2177) gears may be changed or replaced per the Supplier instructions.

The intent of this rule is to maintain the maximum power level for each ROBOT, yet still allow teams to modify mounting tabs and the like, not to gain a weight reduction by potentially compromising the structural integrity of any motor. The integral mechanical and electrical system of the motor is not to be modified.

Note that for the Window motors, the gearbox is considered integral to the motor, thus the motor may not be used without the gearbox.

4.1.8 Power Distribution

4.1.8.1 R34

The only legal source of electrical energy for the ROBOT during the competition, the ROBOT battery, is one of the following 12VDC non-spillable lead acid batteries:

A. MK Battery (P/N: ES17-12) or
B. EnerSys (P/N: NP 18-12)

Exception: Batteries integral to and part of a COTS computing device or self-contained camera are also permitted (e.g. laptop batteries), provided they're only used to power the COTS computing device and any peripheral COTS USB input devices connected to the COTS computing device and they must be securely fastened to the ROBOT.

4.1.8.2 R35

The ROBOT battery must be secured such that it will not dislodge should the ROBOT be turned over or placed in any arbitrary orientation.

4.1.8.3 R36

Each electrical terminal on the ROBOT battery and its connection (lugs, stripped wire ends, etc.) to the 6AWG wire must be fully insulated.

4.1.8.4 R37

Non-electrical sources of energy used by the ROBOT, (i.e., stored at the start of a MATCH), shall come only from the following sources:

A. compressed air stored in the pneumatic system,
B. a change in the altitude of the ROBOT center of gravity, and
C. storage achieved by deformation of ROBOT parts.

4.1.8.5 R38

The ROBOT battery, the main 120-amp (120A) circuit breaker (Cooper Bussman P/N: CB185-120), and the Power Distribution (PD) Board shall be connected as shown in Figure 4-7.

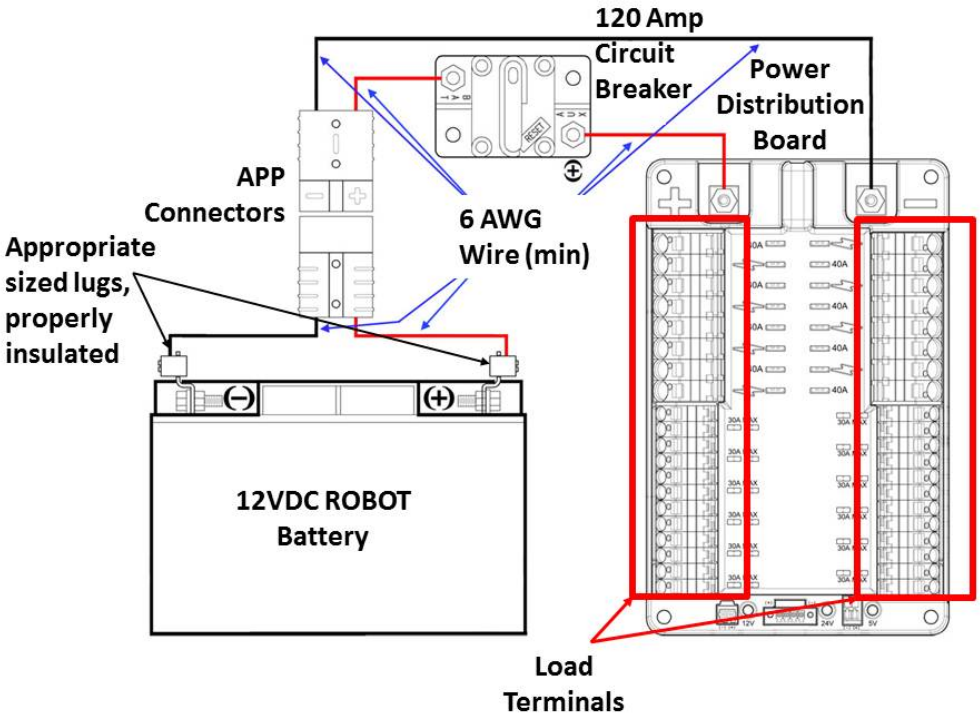

Figure 4-7: Main Power Distribution

4.1.8.6 R39

All circuits, with the exceptions of those listed in R43 and R44, must connect to, and have power sourced solely by, a single protected 12VDC WAGO connector pair (the Load Terminals) or the 5VDC supply on the PD Board (not the M6 shanks) as shown in Figure 4-8.

4.1.8.7 R40

All wiring and electrical devices, including all Control System COMPONENTS, shall be electrically isolated from the ROBOT frame. The ROBOT frame must not be used to carry electrical current.

R40 is checked by observing a >10k? resistance either the (+) or (-) post within the APP connector that is attached to the PD Board and any point on the ROBOT.

The chassis for the cRIO and the Axis 206 camera have grounded enclosures. Under R40 (and for their protection), it is required that they be electrically isolated from the ROBOT frame when installed on the ROBOT.

4.1.8.8 R41

The 120A circuit breaker must be quickly accessible from the exterior of the ROBOT.

It is recommended that the 120A circuit breaker location be clearly and obviously labeled so it can be easily found by ARENA staff during a MATCH. Considering the ROBOT will also have to be powered off before being removed from the PYRAMID, Teams are encouraged to give extra consideration to the placement of the main breaker.

4.1.8.9 R42

The PD Board and all circuit breakers must be easily visible for Inspection.

4.1.8.10 R43

The cRIO power input must be connected to the 24VDC supply terminals on the PD Board shown in Figure 4-8. With the exception of one Solenoid Breakout Board, no other electrical load can be connected to these terminals.

Please note per R70 that, for an 8-slot cRIO, the power drawn by the Solenoid Breakout Board may not exceed 16W. For a 4-slot cRIO, it may not exceed 21W.

4.1.8.11 R44

The wireless bridge power feed must be supplied by the 12VDC-to-5VDC converter (P/N: CLL25-24S05) connected to the marked 12VDC supply terminals at the end of the PD Board (i.e. the terminals located between the indicator LEDs, and not the main WAGO connectors along the sides of the PD Board) shown in Figure 4?8. No other electrical load may be connected to these terminals.

Please reference the 2013 ROBOT Power Distribution Diagram posted on the Kit of Parts site for wireless bridge wiring information.

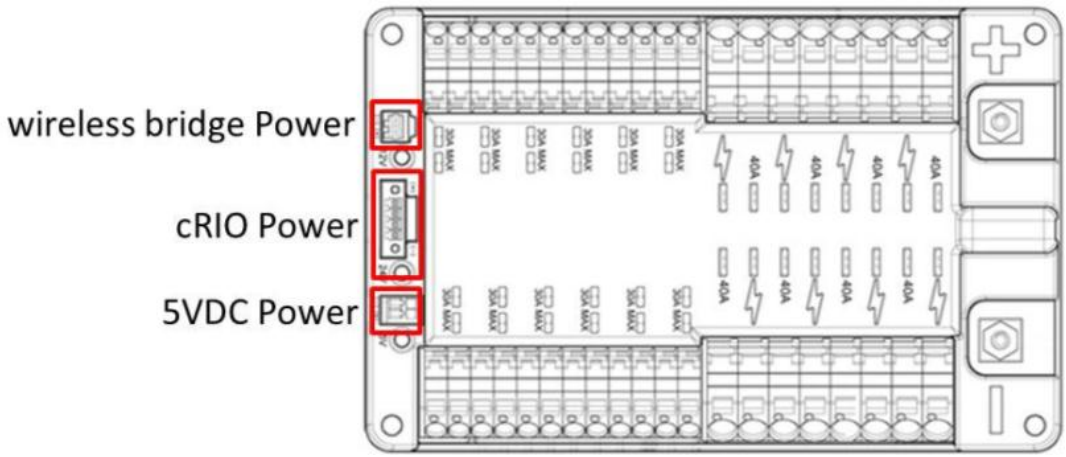

Figure 4-8: Wireless Bridge, cRIO, and 5VDC Power Connections

4.1.8.12 R45

Only one wire may be connected to each WAGO connector on the PD Board.

If multi-point distribution of circuit power is needed (e.g. to provide power to three (3) KOP breakout boards via one 20A circuit), then all incoming wires may be appropriately spliced into the main lead, and only one lead inserted into the WAGO connector to connect the circuit.

4.1.8.13 R46

The only circuit breakers permitted for use in the PD Board are:

A. Snap Action VB3-A Series, terminal style F57
B. Snap Action MX5-A40

4.1.8.14 R47

Each branch circuit must be protected by one and only one circuit breaker on the PD Board per Table 4-2. No other electrical load can be connected to the breaker supplying this circuit.

Table 4-2: Branch Circuit Protection

Branch Circuit	Circuit Breaker Value	Quantity Allowed Per Breaker
Motor Controller	Up to 40A	1
Custom Circuit	Up to 40A	1
Relay Module	Up to 20A	1
Digital Sidecar	20A	1
Analog/Solenoid Breakout Board	20A	3

R47 does not prohibit the use of smaller value fuses within custom circuits for additional protection.

4.1.8.15 R48

All active circuits shall be wired with appropriately sized insulated wire:

Table 4-3: Legal Wire Size

Application	Minimum Wire Size
30 – 40A circuit	12 AWG (2.052mm)
20 – 30A circuit	14 AWG (1.628mm)
5 – 20A circuit	18 AWG (1.024mm)
Between the PD Board and the Analog and/or Solenoid Breakout Boards (even though they are protected by a 20A circuit breaker per R47)	
Between the PD Board and the cRIO	20 AWG (0.8128mm)
Between the PD Board and the wireless bridge	
?5A circuit	
Pneumatic valves	24 AWG (0.5106mm)

Wires that are originally attached to legal devices are part of the device and by default legal as supplies. Such wires are exempt from R48.

4.1.8.16 R49

Branch circuits may include intermediate elements such as COTS connectors, splices, COTS flexible/rolling/sliding contacts, and COTS slip rings, as long as the entire electrical pathway is via appropriately gauged/rated elements.

4.1.8.17 R50

All active circuit wiring with a constant polarity (i.e., except for outputs of relay modules, motor controllers, or sensor outputs) shall be color-coded as follows:

A. Red, white, brown, or black-with-stripe on the +24VDC, +12VDC, and +5VDC connections
B. Black or blue for the common or negative side (-) of the connections.

4.1.8.18 R51

The only power regulating devices for actuators permitted on the ROBOT include:

A. Jaguar motor controller (P/N: MDL-BDC, MDL-BDC24, and 217-3367),
B. Victor 884 motor controller (P/N: VICTOR-884-12/12),
C. Victor 888 motor controller (P/N: 217-2769),
D. Talon motor controller (P/N: CTRE_Talon and am-2195),
E. VEX motor controller (P/N: 276-2193) for controlling VEX 2-wire Motor 393 (P/N: 276-2177) only, and
F. Spike H-Bridge Relay (P/N: 217-0220).

4.1.8.19 R52

Each power regulating device may control electrical loads per Table 4-4. Unless otherwise noted, each power regulating device may control one and only one electrical load.

Table 4-4: Legal Power Regulating Device Use

Electrical Load	Jaguar, Victor, or Talon motor controller	Spike H-Bridge Relay	VEX motor controller	Solenoid Breakout
am PG motor M3-RS390-12 M3-RS395-12 M5-RS545-12 M5-RS555-12 M7-RS775-12 262100-3030 262100-3040 ARA Window motors AE235100-0610	Yes Up to 2 per controller	Yes	No	No
CIM am-0912 M5-RS540-12 M5-RS550-12 M5-RS550-12-B M7-RS775-18 217-3351 217-3371	Yes	No	No	No
276-2177	Yes Up to 2 per controller	Yes	Yes	No
Compressor	No	Yes	No	No
Pneumatic Solenoids	No	Yes*	No	Yes
Electric Solenoids	No	Yes	No	Yes

*Multiple low-load, pneumatic solenoid valves or lights may be connected to a single relay module. This would allow one (1) relay module to drive multiple pneumatic actions or multiple lights. No other electrical load can be connected to a relay module used in this manner.

4.1.8.20 R53

Servos must be directly connected to the PWM ports on the Digital Sidecar. They must not be connected to motor controllers or relay modules.

4.1.8.21 R54

Custom circuits shall not directly alter the power pathways between the ROBOT battery, PD Board, motor controllers, relays, motors, or other elements of the ROBOT control system (including the power pathways to other sensors or circuits). Custom high impedance voltage monitoring or low impedance current monitoring circuitry connected to the ROBOT'S electrical system is acceptable, if the effect on the ROBOT outputs is inconsequential.

4.1.9 Control, Command, & Signals System

4.1.9.1 R55

ROBOTS must be controlled via one (1) programmable National Instruments cRIO (P/N: cRIO-FRC or cRIO-FRCII), with image version FRC_2013_v47.

There are no rules that prohibit co-processors, provided commands originate from the cRIO to configure, enable, and specify all operating points for all power regulating devices. This includes Jaguar motor controllers legally wired to the CAN-bus.

4.1.9.2 R56

One (1) D-Link wireless bridge (P/N: DAP-1522), hardware revision B, is the only permitted device for communicating to and from the ROBOT during the MATCH.

Hardware revision A, distributed in 2011 and 2012, is not legal for 2013. Teams participating in the Irael Regional may use hardware version Rev A or Rev B.

4.1.9.3 R57

The DAP-1522 wireless bridge must be connected to the cRIO Ethernet port 1 (either directly or via a CAT5 Ethernet pigtail).

4.1.9.4 R58

Ethernet-connected COTS devices or custom circuits may connect to any remaining Ethernet port but must not transmit or receive UDP packets using ports 1100-1200 with the exception of ports 1130 and 1140.

4.1.9.5 R59

Communication between the ROBOT and the OPERATOR CONSOLE is restricted as follows:

A. Network Ports:
    A. TCP 1180: This port is typically used for camera data from the cRIO to the Driver Station (DS) when the camera is connected to port 2 on the 8-slot cRIO (P/N: cRIO-FRC). This port is bidirectional.
    B. TCP 1735: SmartDashboard, bidirectional
    C. UDP 1130: Dashboard-to-ROBOT control data, directional
    D. UDP 1140: ROBOT-to-Dashboard status data, directional
    E. HTTP 80: Camera connected via switch on the ROBOT, bidirectional
    F. HTTP 443: Camera connected via switch on the ROBOT, bidirectional

Teams may use these ports as they wish if they do not employ them as outlined above (i.e. TCP 1180 can be used to pass data back and forth between the ROBOT and the DS if the Team chooses not to use the camera on port 2).

B. Bandwidth: 7 Mbits/second

The *FMS Whitepaper* has more details on how to check and optimize bandwidth usage.

4.1.9.6 R60

The cRIO, Driver Station software, and wireless bridge must be configured to correspond to the correct Team number, per the procedures defined in Getting Started with the FRC Control System.

4.1.9.7 R61

All signals must originate from the OPERATOR CONSOLE and be transmitted to the ROBOT via the ARENA network.

4.1.9.8 R62

No form of wireless communication shall be used to communicate to, from, or within the ROBOT, except those required per R56 and R61 (e.g. radio modems from previous *FIRST* competitions and Bluetooth devices are not permitted on the ROBOT during competition).

4.1.9.9 R63

The wireless bridge must be mounted on the ROBOT such that the diagnostic lights are visible to ARENA personnel.

Teams are encouraged to mount the wireless bridge away from noise generating devices

such as motors.

4.1.9.10 R64

ROBOTS must use at least one (1) diagnostic ROBOT Signal Light (RSL) (P/N: 855PB-B12ME522).

Any RSL must be:

A. mounted on the ROBOT such that it is easily visible while standing three (3) ft in front of the ROBOT,
B. connected to the “RSL” supply terminals on a Digital Sidecar that is connected to an NI 9403 module in Slot 2 of the cRIO, and
C. wired for solid light operation, by placing a jumper between the “La” and “Lb” terminals on the light per Figure 4-9.

See the 2013 ROBOT Data Diagram on the KOP website and the item bulletin for connection details.

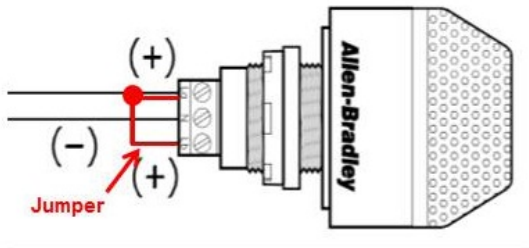

Figure 4-9: Jumper on RSL

4.1.9.11 R65

The Driver Station software, cRIO, motor controllers, relay modules, wireless bridge, and batteries shall not be tampered with, modified, or adjusted in any way (tampering includes drilling, cutting, machining, gluing, rewiring, disassembling, etc.), with the following exceptions:

Please note that the Driver Station application is a separate application from the Dashboard. The Driver Station software may not be modified, while teams are expected to customize their Dashboard code.

A. User programmable code in the cRIO may be customized.
B. Dip switches on the cRIO may be set (applies to cRIO-FRC only).
C. Motor controllers may be calibrated as described in owner's manuals.
D. Fans may be attached to motor controllers and may be powered from the power input terminals.
E. If powering the compressor, the fuse on a Spike H-Bridge Relay may be replaced with a 20A Snap-Action

circuit breaker.

F. Wires, cables, and signal lines may be connected via the standard connection points provided on the devices.
G. Fasteners may be used to attach the device to the OPERATOR CONSOLE or ROBOT.
H. Labeling may be applied to indicate device purpose, connectivity, functional performance, etc.
I. Brake/Coast jumpers on motor controllers may be changed from their default location.
J. Limit switch jumpers may be removed from a Jaguar motor controller and a custom limit switch circuit may be substituted.
K. If CAN-bus functionality is used, the Jaguar firmware must be updated as required by *FIRST* (see Rule R68-D).
L. The First Touch I/O module's firmware may be modified.

Note that if you are using the FirstTouch I/O module as part of the OPERATOR CONSOLE, you should not update the firmware if the manufacturer releases a new version. The new version will wipe out the FIRST custom firmware and your FirstTouch I/O module will no longer function with the Driver Station software. If a team does wipe out the FIRST custom firmware, it can be restored via the most recent Driver Station update.

M. Devices may be repaired, provided the performance and specifications of the component after the repair are identical to those before the repair.

Please note that while repairs are permitted per the FRC Game Manual, the allowance is independent of any manufacturer's warranty. Teams make repairs at their own risk and should assume that any warranty or RMA options are forfeited. Be aware that diagnosing and repairing COMPONENTS such as these can be difficult.

4.1.9.12 R66

Neither 12VDC power nor relay module or motor controller outputs may be connected to the Analog/Solenoid Breakout Boards or the Digital Sidecar (with the exception of the designated 12VDC input terminals).

4.1.9.13 R67

Every relay module, servo, and PWM motor controller shall be connected via PWM cable to the Digital Sidecar and be controlled by signals provided from the cRIO via the Digital Sidecar. They shall not be controlled by signals from any other source.

4.1.9.14 R68

Each Jaguar must be controlled with signal inputs sourced from the cRIO and passed via either a connected PWM cable or a CAN-bus connection.

1. The Jaguar must receive signals via either a PWM cable or a CAN-bus connection. Both may not be used simultaneously.
2. PWM configuration: If the Jaguar motor controller is controlled via PWM communications, the PWM port on the

Jaguar motor controller must be connected directly to a PWM port on the Digital Sidecar with a PWM cable. No other device may be connected to these PWM ports. No other device may be connected to any other port on the Jaguar motor controller with the exception of connection to the coast/brake port or the limit switch ports.

3. CAN-bus configuration: If the Jaguar motor controller is controlled via CAN-bus communications, each Jaguar motor controller must be connected to either the cRIO or another CAN-bus device with a CAN-bus cable.
4. If the CAN-bus configuration is used, the firmware on gray Jaguar motor controllers must be updated to at least Version 101 of the official *FIRST* firmware and Version 107 for black Jaguars.

As long as the CAN bus is wired legally so that the heartbeat from the cRIO is maintained, all closed loop control features of the Jaguar motor controller may be used. (That is, commands originating from the cRIO to configure, enable, and specify an operating point for all Jaguar closed loop modes fit the intent of R55.)

4.1.9.15 R69

If CAN-bus communication is used, the CAN-bus must be connected to the cRIO through either the Ethernet network connected to Port 1, Port 2, or the DB-9 RS-232 port connection.

A. Ethernet-to-CAN bridges or RS-232-to-CAN bridges (including the “black” Jaguars) may be used to connect the CAN-bus to the cRIO.
B. Additional switches, sensor modules, custom circuits, third-party modules, etc. may also be placed on the CAN-bus.
C. No device that interferes with, alters, or blocks communications between the cRIO and the Jaguars will be permitted (tunneling packets for the purposes of passing them through an Ethernet-to-CAN bridge is acceptable as the commands are not altered).

4.1.9.16 R70

Outputs from each Solenoid Breakout shall not cumulatively exceed 16W for the cRIO-FRC (8-slot) and 21W for the cRIO-FRC II (4-slot).

4.1.9.17 R71

Control components must be configured to report the ROBOT’S battery voltage. Specifically:

A. A National Instruments 9201 analog module must be installed in slot 1 of the cRIO.
B. An Analog Breakout Board must be connected to this module.
C. A jumper must be installed in the “Power” position (two outer pins) on the Analog Breakout Board (see Figure 4-10).
D. The Analog Breakout Board must be powered from the PD Board.

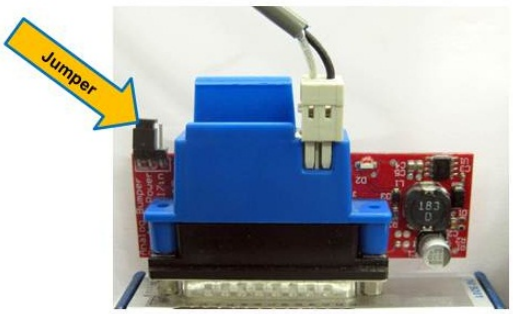

Figure 4-10: Jumper for Battery Voltage Reading

4.1.9.18 R72

All outputs from sensors, custom circuits and additional electronics shall connect to only the following:

A. other custom circuits,
B. additional COTS electronics,
C. input ports on the Digital Sidecar,
D. input ports on the Analog Breakout Board,
E. the RS-232 port on the cRIO,
F. the Ethernet network connected to either Port 1 or Port 2 of the cRIO,
G. the CAN-bus if and only if all Jaguar motor controllers on the CAN-bus are wired in full compliance with R68 and R69, or
H. the sensor inputs on the Jaguar motor controller.

Custom circuits and additional electronics are allowed to utilize the Port 2 Ethernet bus on the cRIO-FRC and/or the CAN-bus to communicate between devices. Note however, that the ROBOT must be controlled by the cRIO (see R55). Thus, any additional devices on the Ethernet or CAN-bus must not provide command signals that do not originate from the cRIO.

4.1.9.19 R73

A noise filter may be wired across motor leads or PWM leads. Such filters will not be considered custom circuits and will not be considered a violation of R54 or R72.

Acceptable signal filters must be fully insulated and must be one of the following:

A. A one microfarad (1 µF) or less non-polarized capacitor may be applied across the power leads of any motor on your ROBOT (as close to the actual motor leads as reasonably possible).
B. A resistor may be used as a shunt load for the PWM control signal feeding a servo.

4.1.9.20 R74

Any decorations that involve broadcasting a signal to/from the ROBOT, such as remote cameras, must be approved by *FIRST* (via e-mail to frcparts@usfirst.org) prior to the event and tested for communications interference at the venue. Such devices, if reviewed and approved, are excluded from R62.

4.1.10 Pneumatics System

4.1.10.1 R75

To satisfy multiple constraints associated with safety, consistency, Inspection, and constructive innovation, no pneumatic parts other than those explicitly permitted in Section 4.1.10 may be used on the ROBOT.

4.1.10.2 R76

All pneumatic components must be COTS pneumatic devices rated by their manufacturers for working pressure of at least 125psi (with the exception of R78-D).

4.1.10.3 R77

All pneumatic COMPONENTS must be used in their original, unaltered condition. Exceptions are as follows:

A. tubing may be cut,
B. wiring for pneumatic devices may be modified to interface with the control system,
C. assembling and connecting pneumatic COMPONENTS using the pre-existing threads, mounting brackets, quick-connect fittings, etc.,
D. removing the mounting pin from a pneumatic cylinder, provided the cylinder itself is not modified,
E. labeling applied to indicate device purpose, connectivity, functional performance, etc.

Do not, for example, paint, file, machine, or abrasively remove any part of a pneumatic COMPONENT – this would cause the part to become a prohibited item. Consider pneumatic COMPONENTS sacred.

4.1.10.4 R78

The only pneumatic system items permitted on 2013 FRC ROBOTS include the items listed below.

A. Items available in the 2013 KOP,
B. Pneumatic pressure vent plug valves functionally equivalent to those provided in the KOP,

Parker valves PV609-2 or MV709-2 are recommended.

C. Solenoid valves with a maximum $^{1}/_{8}$ in. NPT port diameter, and a maximum Cv of 0.32,
D. Solenoid valves that are rated for a maximum working pressure that is less than 125 psi rating mandated above are permitted, however if employed, an additional pressure relief valve must be added to the low pressure side of the main regulator. The additional relief valve must be set to a lower pressure than the maximum pressure rating for the solenoid valve,
E. Additional pneumatic tubing, with a maximum 0.160 in. inside diameter, functionally equivalent to that provided in the KOP,
F. Pressure transducers, pressure gauges, and connecting fittings,
G. Pressure regulators with a maximum bypass pressure of no more than 60 psi,
H. Pneumatic cylinders,
I. Pneumatic storage tanks, and
J. Compressors compliant with R80.

The following devices are not considered pneumatic devices and are not subject to pneumatic rules (though they must satisfy all other rules):

A. a device that creates a vacuum

B. closed-loop COTS pneumatic (gas) shocks

C. air-filled (pneumatic) wheels

4.1.10.5 R79

If pneumatic COMPONENTS are used on the ROBOT, the following items are required as part of the pneumatic system and must be connected in accordance with this section per Figure 4-11.

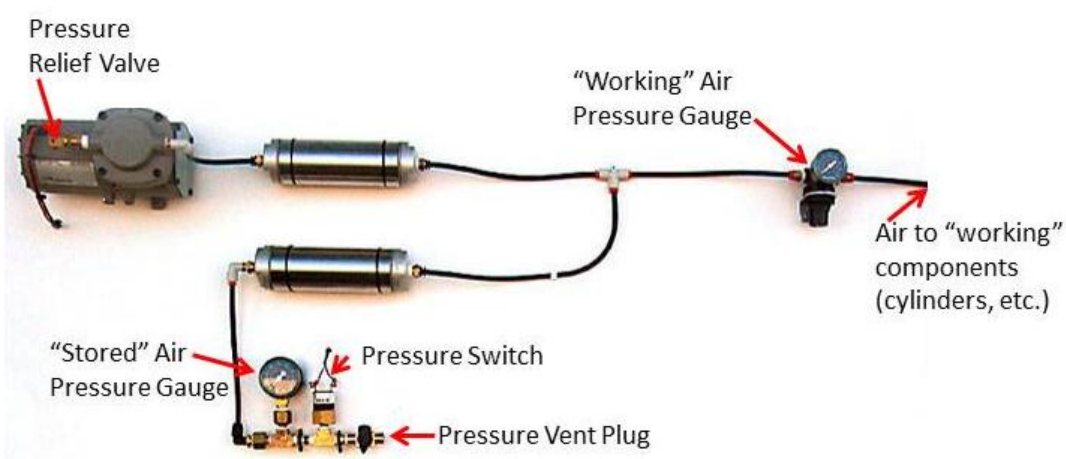

Figure 4-11: Pneumatic System Setup

4.1.10.6 R80

Compressed air on the ROBOT must be provided by one and only one compressor. Compressor specifications may not exceed nominal 12VDC, 1.05 cfm flow rate. Off-board compressors must be controlled and powered by the ROBOT.

The intent of this rule is to permit teams to take advantage of the weight savings associated with keeping the compressor off-board. However, using the compressor off-board of the ROBOT does NOT permit non-compliance with any other applicable rules.

The compressor may be mounted on the ROBOT, or it may be left off the ROBOT and used to pre-charge compressed air in storage tanks on the ROBOT prior to bringing the ROBOT onto the FIELD.

4.1.10.7 R81

"Stored" air pressure on the ROBOT must be no greater than 120 psi. "Working" air pressure on the ROBOT must be no greater than 60 psi. All working air must be provided through one primary adjustable pressure regulator.

Norgren regulator P/N: R07-100-RNEA recommended.

4.1.10.8 R82

Only the compressor, relief valve (P/N: 16-004-011), pressure switch, pressure vent plug valve, pressure gauge, storage tanks, tubing, and connecting fittings may be in the high-pressure pneumatic circuit upstream from the regulator.

4.1.10.9 R83

Pressure gauges must be placed in easily visible locations upstream and downstream of the regulator to display the "stored" and "working" pressures.

4.1.10.10 R84

If the compressor is not included on the ROBOT (under the provisions of Rule R80), the regulator and high-pressure gauge may be located on-board or off-board (but must be together), provided all other pneumatic rules are satisfied.

4.1.10.11 R85

If the regulator is kept off-board the ROBOT with the compressor, then only low-pressure (60 psi or less) "working" air

can be stored on the ROBOT.

4.1.10.12 R86

The relief valve must be attached directly to the compressor or attached by legal fittings connected to the compressor output port. If using an off-board compressor, an additional relief valve must be included in the high pressure side of the pneumatic circuit on the ROBOT.

If necessary, Teams are required to adjust the relief valve to release air at 125 psi. The valve may or may not have been calibrated prior to being supplied to Teams.

4.1.10.13 R87

The pressure switch requirements are:

A. It must be connected to the high-pressure side of the pneumatic circuit (i.e. prior to the pressure regulator) to sense the “stored” pressure of the circuit.
B. The two wires from the pressure switch must be connected directly to a digital input and ground pin on the Digital Sidecar.
C. The cRIO must be programmed to sense the state of the switch and operate the relay module that powers the compressor to prevent over-pressuring the system.

4.1.10.14 R88

The pressure vent plug valve must be:

A. connected to the pneumatic circuit such that, when manually operated, it will vent to the atmosphere to relieve all stored pressure, and
B. placed on the ROBOT so that it is visible and easily accessible.

If the compressor is not used on the ROBOT, then an additional vent valve must be obtained and connected to the high-pressure portion of the pneumatic circuit off board the ROBOT with the compressor (see R80).

4.1.10.15 R89

The outputs from multiple valves may not be plumbed together.

4.1.11 OPERATOR CONSOLE

4.1.11.1 R90

The Driver Station software provided on the Kit of Parts website is the only application permitted to specify and communicate the operating mode (i.e. Autonomous/Teleop) and operating state (Enable/Disable) to the ROBOT. The Driver Station software must be revision 12.19.12.00 or newer.

Teams are permitted to use a portable computing device of their choice (laptop computer, PDAs, etc.) to host the Driver Station software while participating in competition MATCHES.

4.1.11.2 R91

The OPERATOR CONSOLE must include a graphic display to present the Driver Station disgnostic information. It must be positioned within the OPERATOR CONSOLE so that the screen display can be clearly seen during Inspection and in a MATCH.

4.1.11.3 R92

Devices hosting the Driver Station software may only interface with the Field Management System (FMS) via the Ethernet cable provided at the PLAYER STATION. The Ethernet port on the OPERATOR CONSOLE must be easily and quickly accessible.

Teams are strongly encouraged to use pigtails on the Ethernet port used to connect to the FMS. Such pigtails will reduce wear and tear on the device's port and, with proper strain relief employed, will protect the port from accidental jerks.

4.1.11.4 R93

The OPERATOR CONSOLE must not exceed 60 in. long by 12 in. deep (excluding any items that are held or worn by the DRIVERS during the match).

There is a 54 in. long by 2 in. wide strip of hook-and-loop tape ("loop" side) along the center of the PLAYER STATION support shelf that may be used to secure the OPERATOR CONSOLE to the shelf. See Section 2.2.9 for details.

4.1.11.5 R94

Other than the system provided by the ARENA, no other form of wireless communications shall be used to communicate to, from, or within the OPERATOR CONSOLE.

Examples of prohibited wireless systems include, but are not limited to, active wireless network cards and Bluetooth devices. For the case of FRC, a motion sensing input device (e.g. Microsoft Kinect) is not considered wireless communication and is allowed.

4.2 Revision History

Date	Section	Change
1/8/13	4.1.8	Updated Table 4-3 to allow up to 20A circuit to use 18 AWG wire

5 The Tournament

***FIRST*®, the *FIRST*® logo, *FIRST*® Robotics Competition, FRC ®, Coopertition®, and Gracious Professionalism® are registered trademarks, and Sport for the Mind™ and ULTIMATE ASCENT℠ are common law trademarks, of the United States Foundation for Inspiration and Recognition of Science and Technology (*FIRST*®). ©2013*FIRST*. All rights reserved.**

5.1 Overview

Each 2013 *FIRST* Robotics Competition (FRC) event is played in a tournament format. Each tournament consists of three sets of MATCHES called “Practice MATCHES,” “Qualification MATCHES,” and “Elimination MATCHES.”

The purpose of the Practice MATCHES is to provide each Team with an opportunity to operate its ROBOT on the FIELD prior to the start of the Qualification MATCHES.

The purpose of the Qualification MATCHES is to allow each Team to earn a seeding position that may qualify them for participation in the Elimination MATCHES.

The purpose of the Elimination MATCHES is to determine the event Champions.

Each MATCH is conducted with approximately two (2)-minutes for set up, two minutes and fifteen seconds (2:15) of game play, and one (1)-minute to clear the FIELD. After each MATCH, the ARENA must be cleared of ROBOTS and

OPERATOR CONSOLES from the MATCH that just ended. The ROBOTS and OPERATOR CONSOLES for the following MATCH must be placed in position and ready to start before the start of the next MATCH. Event staff will reset the ARENA elements during this time.

5.2 Practice Matches

5.2.1 Schedule

Practice MATCHES are played on the first day of each event. The Practice MATCH schedule is available as soon as possible, but before Practice MATCHES start. Practice MATCHES are randomly assigned and each Team is assigned an equal number of Practice MATCHES. If the number of Teams multiplied by number of Practice MATCHES is not divisible by six, the FMS randomly selects some Teams to play an extra Practice MATCH.

5.2.2 Filler Line

Although Teams may not switch practice times, there will be a designated Filler Line at each event. Teams wanting additional Practice MATCHES may join the Filler Line if the criteria below are met. Teams from the Filler Line will be used on a first come, first served basis to fill empty spots in Practice MATCHES left by other Teams that do not report to Queueing. The number of TEAMS in the Filler Line is dependent upon space at venues. The criteria for joining the Filler Line are as follows:

A. ROBOTS in the Filler Line must have passed Inspection;
B. Teams must join the Filler Line with their ROBOT;
C. Teams may not work on their ROBOT while in the Filler Line;
D. Teams may not occupy more than one spot in the Filler Line; and
E. If a Team is queued up for their Practice MATCH, they may not also join the Filler Line.

5.3 Qualification Matches

5.3.1 Schedule

The Qualification MATCH schedule is made available as soon as possible, but no later than 1 hour before Qualification MATCHES are scheduled to begin.

5.3.2 MATCH Assignment

The Field Management System (FMS) assigns each Team two (2) ALLIANCE partners for each Qualification MATCH using a predefined algorithm. The algorithm employs the following criteria, listed in order of priority:

1. Maximize time between each MATCH played for all Teams
2. Minimize the number of times a Team plays opposite any Team
3. Minimize the number of times a Team is allied with any Team
4. Minimize the use of SURROGATES

5. Provide even distribution of MATCHES played on Blue and Red ALLIANCE

All Teams are assigned the same number of Qualification MATCHES. If the number of Teams multiplied by number of MATCHES is not divisible by six, the FMS randomly selects some Teams to play an extra MATCH. For the purpose of seeding calculations, those Teams are designated as SURROGATES for the extra MATCH. If a Team plays a MATCH as a SURROGATE, it is indicated on the MATCH schedule, and it is always their third Qualification MATCH. Figure 5-1 details information shown on a MATCH schedule.

The Qualification MATCH schedule indicates ALLIANCE partners and MATCH pairings. It also indicates the ALLIANCE color assignment, “Red” or “Blue,” for each MATCH.

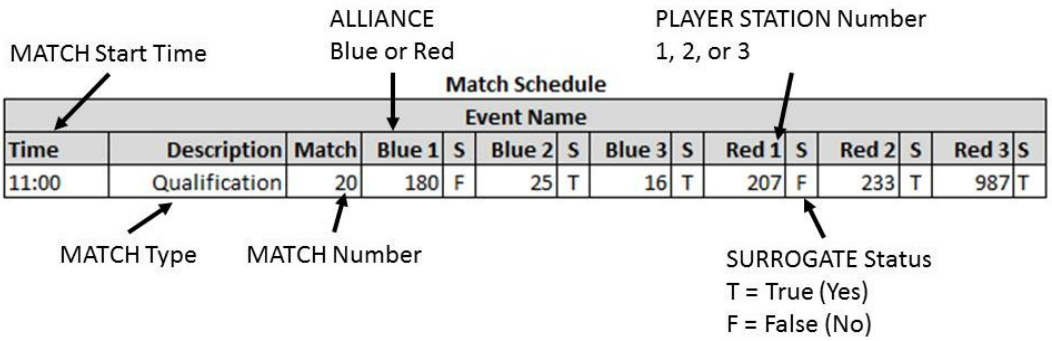

Time	Description	Match	Blue 1	S	Blue 2	S	Blue 3	S	Red 1	S	Red 2	S	Red 3	S
11:00	Qualification	20	180	F	25	T	16	T	207	F	233	T	987	T

Figure 5-1: Sample MATCH Schedule

5.3.3 Qualification Score (QS)

Qualification Points are awarded to each Team at the completion of each Qualification MATCH and are dependent on the final score:

- Each Team on the winning ALLIANCE receives two (2) Qualification Points.
- Each Team on the losing ALLIANCE receives zero (0) Qualification Points.
- In the event of a tied score, all six Teams receive one (1) Qualification Point.

Exceptions to these scenarios are as follows:

- A SURROGATE receives zero (0) Qualification Points.
- A Team is declared a no-show if no member of the TEAM is in the ALLIANCE STATION at the start of the MATCH; a no-show Team is disqualified from that MATCH and receives zero (0) Qualification Points.
- During the Qualification MATCHES, Teams may be individually DISQUALIFIED in a MATCH. A DISQUALIFIED (including via a RED CARD) Team receives zero (0) Qualification Points.

The total number of Qualification Points earned by a Team throughout their Qualification MATCHES is their Qualification Score.

5.3.4 Qualification Seeding

All Teams in attendance are seeded during the Qualification MATCHES. If the number of Teams in attendance is 'n', they are seeded '1' through 'n', with '1' being the highest seeded Team and 'n' being the lowest seeded Team.

The FMS ranks all Teams in decreasing order, using the following sorting criteria:

1st order sort	Qualification Score
2nd order sort	Cumulative sum of AUTO GOAL points
3rd order sort	Cumulative sum of CLIMB points
4th order sort	Cumulative sum of TELEOP GOAL points and FOUL points
5th order sort	Random sorting by the FMS

5.4 Elimination Matches

At the end of the Qualification MATCHES, the top eight (8) seeded Teams become the ALLIANCE Leads. The top seeded ALLIANCES are designated, in order, ALLIANCE One, ALLIANCE Two, etc., down to ALLIANCE Eight. Using the ALLIANCE selection process described below, each Team chooses two (2) other Teams to join their ALLIANCE.

5.4.1 ALLIANCE Selection Process

Each Team chooses a student Team Representative who will proceed to the ARENA at the designated time (typically before the lunch break on the final day of the event) to represent their Team. The Team Representative from each ALLIANCE Lead is called the ALLIANCE CAPTAIN.

The ALLIANCE selection process consists of two rounds during which each ALLIANCE CAPTAIN invites a Team seeded below them in the standings to join their ALLIANCE. The invited Team must not already have declined an invitation.

Round 1: In descending order (ALLIANCE One to ALLIANCE Eight), each ALLIANCE CAPTAIN invites a single Team. The invited Team Representative steps forward and either accepts or declines the invitation.

If the Team accepts, it is moved into that ALLIANCE. If an invitation from a top eight ALLIANCE to another ALLIANCE Lead is accepted, all lower ALLIANCE Leads are promoted one spot and the next highest seeded unselected Team moves up to become ALLIANCE Eight.

If the Team declines, that Team is not eligible to be picked again and the ALLIANCE CAPTAIN extends another invitation to a different Team. If an invitation from a top eight ALLIANCE to another ALLIANCE Lead is declined, the declining Team may still invite Teams to join their ALLIANCE; however, it cannot accept invitations from other ALLIANCES.

The process continues until ALLIANCE Eight makes a successful invitation.

Round 2: The same method is used for each ALLIANCE CAPTAIN'S second choice except the selection order is reversed, with ALLIANCE Eight picking first and ALLIANCE One picking last. This process results in eight (8) ALLIANCES of three (3) Teams each.

5.4.2 BACKUP TEAMS

Of the remaining eligible Teams, the highest seeded Teams (up to eight) should remain on standby and be ready to play as a BACKUP TEAM. If a ROBOT from any ALLIANCE in an Elimination MATCH becomes inoperable the ALLIANCE CAPTAIN may have the highest seeded BACKUP TEAM still available join the ALLIANCE. The resulting ALLIANCE is then composed of four (4) Teams. The replaced Team remains part of the ALLIANCE for awards but cannot play, even if their ROBOT is repaired.

Each ALLIANCE only has one opportunity to draw from the BACKUP TEAMS. If a second ROBOT from the ALLIANCE becomes inoperable, then the ALLIANCE must play the following MATCHES with only two (2) (or even one(1)) ROBOTS. It is in the best interest of all Teams to construct their ROBOTS to be as robust as possible to prevent this situation.

Example: Three (3) Teams, A, B and C, form an ALLIANCE going into the Elimination MATCHES. The highest seeded Team not on one of the eight (8) ALLIANCES is Team D. During one of the Elimination MATCHES, Team C's ROBOT becomes inoperable. The ALLIANCE CAPTAIN decides to bring in Team D to replace Team C. Team C and their ROBOT may not play in any subsequent Elimination MATCHES.

5.4.3 Elimination MATCH Bracket

The Elimination MATCHES take place on the afternoon following the completion of the Qualification MATCHES. Elimination MATCHES are played in a bracket format as follows:

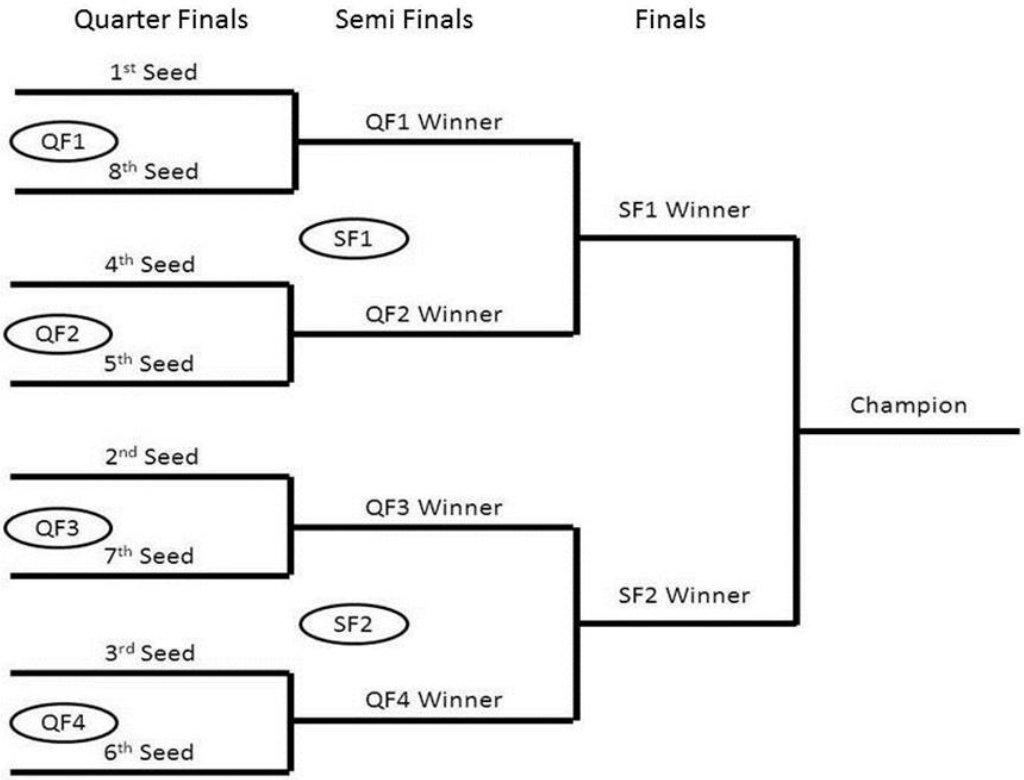

Figure 5-2: Elimination MATCH Bracket

In order to allow time between MATCHES for all ALLIANCES, the order of play is as follows:

QF1-1, QF2-1, QF3-1, QF4-1,

QF1-2, QF2-2, QF3-2, QF4-2,

QF1-3*, QF2-3*, QF3-3*, QF4-3*

Any Quarter-Final replays due to ties*

SF1-1, SF2-1, SF1-2, SF2-2, SF1-3*, SF2-3*

Any Semi-Final replays due to ties*

F-1, F-2, F-3*

Any Final replays due to ties*

(* - if required)

5.4.4 Elimination Scoring

In the Elimination MATCHES, Teams do not earn Qualification Points; they earn a Win, Loss or Tie. Within each series of the Elimination MATCH bracket, the first ALLIANCE to win two MATCHES will advance.

In the case where the MATCH score of each ALLIANCE is equal, the tie is broken by awarding an extra point to the ALLIANCE with (in the following order):

1. highest number of FOUL points awarded (i.e. the ALLIANCE that played the cleaner MATCH)
2. if FOUL points are equal, highest number of AUTO GOAL points
3. if AUTO GOAL points are equal, highest number of CLIMB points

If the criteria above are equal, the MATCH is a Tie and will be replayed if needed.

5.5 Tournament Rules

5.5.1 Safety and Security Rules

5.5.1.1 T01

All event attendees must wear safety glasses while in the ARENA.

5.5.1.2 T02

Wireless ROBOT control is not permitted outside the FIELD or Practice Field. ROBOTS must only be operated by tether when outside the FIELD or Practice Field.

5.5.1.3 T03

ROBOTS must use the provided Practice Field radio for communication if operating wirelessly on the Practice Field.

5.5.1.4 T04

Teams are not allowed to set up their own 802.11a/b/g/n/ac (2.4GHz or 5GHz) wireless communication (e.g. access points or ad-hoc networks) in the venue.

A wireless hot spot created by a cellular device would be considered an access point.

5.5.1.5 T05

No Team or Team member shall interfere or attempt to interfere with any other Team's or FIRST's wireless communication. Except as expressly allowed for purposes of communicating with the Team's own ROBOT on the FIELD or a Practice Field, no Team or Team member shall connect or attempt to connect to any other Team's or FIRST's wireless network.

Violation: Up to and including DISQUALIFICATION of the Team from the event. Legal action may also be pursued based on applicable law.

Teams are encouraged to report suspected wireless security vulnerabilities to the FTA (if at the event) or to *FIRST* via email to frcteams@usfirst.org.

5.5.2 Eligibility and Inspection

At each event, the Lead ROBOT Inspector (LRI) has final authority on the legality of any COMPONENT, MECHANISM, or ROBOT. Inspectors may re-Inspect ROBOTS to ensure compliance with the rules.

ROBOTS are allowed to participate in scheduled Practice MATCHES prior to passing Inspection. However, the FTA, LRI or Head Referee may determine at any time that the ROBOT is unsafe, per Section 3.2.1, and may prohibit further

participation in Practice MATCHES until the condition is corrected and the ROBOT passes Inspection.

5.5.2.1 T06

A TEAM is only allowed to participate in a MATCH and receive Qualification Points if their ROBOT has passed Inspection. If it is discovered after the start of the MATCH that a ROBOT did not pass Inspection, the entire ALLIANCE will receive a RED CARD for that MATCH.

Please take note of this rule. It is important that FRC Teams ensure their ALLIANCE partners have passed Inspection. Allowing a partner that has not passed Inspection to play puts the ALLIANCE at risk of DISQUALIFICATION. Teams should check with their ALLIANCE partners early and help them to pass Inspection before competing.

Sending TEAM members to the ARENA without the ROBOT is considered participating in a MATCH.

5.5.2.2 T07

Any ROBOT construction technique or element that is not in compliance with the ROBOT Rules must be rectified before a ROBOT will be allowed to compete or continue competing. ROBOTS must fully pass Inspection before they will be allowed to compete in Qualification or Elimination MATCHES.

5.5.2.3 T08

At the time of Inspection, the ROBOT must be presented with all MECHANISMS (including all COMPONENTS of each MECHANISM), configurations, and decorations that will be used on the ROBOT during the entire competition event. It is acceptable, however, for a ROBOT to play MATCHES with a subset of the MECHANISMS that were present during Inspection. Only MECHANISMS that were present during the Inspection may be added, removed or reconfigured between MATCHES. If MECHANISMS are changed between MATCHES, the reconfigured ROBOT must still meet all Inspection criteria.

5.5.2.4 T09

The ROBOT Bill of Materials (BOM) must be presented at the time of Inspection.

Teams are encouraged to use the BOM Template posted on the *FIRST* website. Please note that while BOMs must be shown to Inspectors, FRC Teams are not required to submit their BOMs to the Inspectors.

5.5.2.5 T10

If a ROBOT is modified after it has passed Inspection, other than modifications described in T8, that ROBOT must be re-Inspected.

If an observation is made that another Team's ROBOT may be in violation of the ROBOT rules, please approach *FIRST* officials to review the matter in question. This is an area where Gracious Professionalism™ is very important.

5.5.2.6 T11

At events, Teams may only produce FABRICATED ITEMS in the pit areas or provided machine shops, as defined in the Administrative Manual, Section 4.8, The Pit.

5.5.2.7 T12

For the safety of all those involved, Inspections must take place with the ROBOT powered off, pneumatics unpressurized, and springs or other stored energy devices in their lowest potential energy states (i.e. battery removed).

Power and air pressure should only be enabled on the ROBOT during those portions of the Inspection process where it is absolutely required to validate certain system functionality and compliance with specific rules (firmware check, etc.). Inspectors may allow the ROBOT to be powered up beyond the parameters above if both criteria below are met.

A. The ROBOT design requires power or a charged stored energy device in order to confirm that the ROBOT meets volume requirements, and
B. The Team has included safety interlocks that prevent unexpected release of such stored energy.

5.5.3 Referee Interaction

The Head Referee has the ultimate authority in the ARENA during the event, but may receive input from additional sources, e.g. Game Designers, *FIRST* personnel, and technical staff. The Head Referee rulings are final. The Head Referee will not review recorded replays under any circumstances.

5.5.3.1 T13

If a TEAM needs clarification on a ruling or score, one (1) pre-college student from that TEAM should address the Head Referee after the ARENA reset signal (i.e. PLAYER STATION LED strings turn green). A TEAM member signals their desire to speak with the Head Referee by standing in the Red or Blue Question Box, which are located on the floor at each end of the scoring table. Depending on timing, the Head Referee may postpone any requested discussion until the end of the subsequent MATCH.

5.5.4 YELLOW and RED CARDS

The Head Referee may assign a YELLOW or RED CARD as a result of egregious ROBOT or Team member behavior at the ARENA.

A YELLOW or RED CARD is indicated by the Head Referee standing in front of the Team's PLAYER STATION and holding a YELLOW or RED CARD in the air after the completion of the MATCH.

Once a Team receives a YELLOW or RED CARD, its Team number will be colored yellow on the audience screen at the beginning of all subsequent MATCHES as a reminder to the Team, the Referees, and the audience that they carry a YELLOW CARD.

Examples of egregious behavior include, but are not limited to, severe and/or repeated violations of a rule and inappropriate behavior.

A Team is issued a RED CARD (DISQUALIFICATION) in any subsequent MATCH in which they receive an additional YELLOW CARD. This occurs after the completion of the MATCH.

A RED CARD is indicated by the Head Referee standing in front of the Team's PLAYER STATION and holding a YELLOW CARD and RED CARD in the air simultaneously. The Team will still carry their YELLOW CARD into subsequent MATCHES.

YELLOW CARDS do not carry forward between Qualification MATCHES and Elimination MATCHES (i.e. all Teams move into the Elimination MATCHES with a clean slate).

During the Elimination MATCHES, if a Team receives a RED CARD, the entire ALLIANCE is DISQUALIFIED for that MATCH.

5.5.5 ARENA Reset Rules

5.5.5.1 T14

At the conclusion of a MATCH, TEAMS must remain in their ALLIANCE STATION until the ARENA reset signal is issued, as indicated by the PLAYER STATION LED strings illuminating green.

5.5.5.2 T15

ROBOTS will not be re-enabled after the conclusion of the MATCH, nor will Teams be permitted to tether to the ROBOT.

5.5.5.3 T16

If, in the judgment of the Head Referee, an “ARENA fault” occurs that affects the outcome of the MATCH, the MATCH will be replayed. Example ARENA faults include broken FIELD elements, power failure to a portion of the FIELD, improper activation of the FMS, errors by FIELD personnel, etc.

5.5.6 TIMEOUT and BACKUP TEAM Rules

There are no TIMEOUTS in the Qualification MATCHES. If a ROBOT cannot report for a MATCH, the Lead Queuer should be informed and at least one member of the TEAM should report to the ARENA for the MATCH to avoid receiving a RED CARD, with the exception of a Team that has not passed Inspection, per Rule T6.

In the Elimination MATCHES, each ALLIANCE will be allotted one (1) TIMEOUT.

During a TIMEOUT, the ARENA Timer will display the time remaining in the TIMEOUT. Both ALLIANCES will enjoy the complete 6-minute window. If an ALLIANCE completes their repairs before the ARENA Timer expires, the ALLIANCE CAPTAIN is encouraged to inform the Head Referee that they are ready to play. If both ALLIANCES are ready to play before the TIMEOUT expires, the next MATCH will start.

During the Elimination MATCHES, if circumstances require an ALLIANCE to play in back-to-back MATCHES, there will be a FIELD TIMEOUT to allow Teams to prepare for the next MATCH.

5.5.6.1 T17

If an ALLIANCE wishes to call a TIMEOUT, they must submit their TIMEOUT coupon to the Head Referee within two (2) minutes of the ARENA reset signal preceding their MATCH.

5.5.6.2 T18

There are no cascading TIMEOUTS. If an ALLIANCE calls a TIMEOUT during a FIELD TIMEOUT, the FIELD TIMEOUT will immediately expire and the ALLIANCE’S TIMEOUT will begin.

If an ALLIANCE wishes to call a TIMEOUT during a FIELD TIMEOUT, it must still do so within two (2) minutes of the ARENA reset signal preceding their MATCH, per Rule T17.

5.5.6.3 T19

TIMEOUTS are not transferrable between ALLIANCES.

5.5.6.4 T20

If during a TIMEOUT an ALLIANCE CAPTAIN determines that they need to call up a BACKUP ROBOT, they must

submit their BACKUP ROBOT coupon to the Head Referee while there is still at least two (2) minutes remaining on the ARENA Timer. After that point, they will not be allowed to utilize the BACKUP ROBOT.

Alternatively, an ALLIANCE CAPTAIN may choose to call up a BACKUP ROBOT without using their TIMEOUT by informing the Head Referee directly within two (2) minutes of the Head Referee issuing the ARENA reset signal preceding their MATCH.

In the case where the ALLIANCE CAPTAIN'S ROBOT is replaced with the BACKUP ROBOT, the ALLIANCE CAPTAIN is allowed in the ALLIANCE STATION as a thirteenth ALLIANCE member so they can serve in an advisory role to their ALLIANCE.

5.5.6.5 T21

An ALLIANCE may request neither a TIMEOUT nor a BACKUP TEAM after an Elimination MATCH is stopped by the Head Referee (e.g. due to an ARENA fault or a safety issue). The sole exception is if the replay is due to an ARENA fault that rendered a ROBOT inoperable.

If an Elimination MATCH is replayed per T21 the Head Referee has the option of calling a FIELD TIMEOUT.

5.5.7 Measurement

The ARENA will be open for at least one (1) hour prior to the start of Practice MATCHES, during which Teams may survey and/or measure the FIELD. The specific time that the FIELD is open will be communicated to Teams at the event. Teams may bring specific questions or comments to the FTA.

5.5.8 Special Equipment Rules

5.5.8.1 T22

The only equipment that may be brought in to the ALLIANCE STATION are as follows:

A. the OPERATOR CONSOLE,
B. non-powered signaling devices,
C. reasonable decorative items,
D. special clothing and/or equipment required due to a disability
E. devices used solely for the purpose of planning or tracking strategy provided they meet all of the following conditions:
    i. do not connect or attach to the OPERATOR CONSOLE
    ii. do not connect or attach to the FIELD or ARENA
    iii. do not connect or attach to another ALLIANCE member
    iv. do not communicate with anything or anyone outside of the ARENA.
    v. do not include any form of enabled wireless electronic communication (e.g. radios, walkie-talkies, cell

phones, Bluetooth communications, Wi-Fi, etc.)

vi. do not in any way affect the outcome of a MATCH, other than by allowing PLAYERS to plan or track strategy for the purposes of communication of that strategy to other ALLIANCE members.

5.6 Championship Additions

At the 2013 *FIRST* Championship, Teams are split into four (4) Divisions: Archimedes, Curie, Galileo, and Newton. Each Division plays like a Regional Event to produce the Division Champions. Those four (4) ALLIANCES proceed to the Championship Playoffs, on the Einstein FIELD, to determine the 2013 FRC Champions.

The procedures in Sections 5.1 - 5.5 apply during the Championship, with the additions defined below.

5.6.1 Championship Pit Crews

During the Elimination MATCHES, extra Team members may be needed to maintain the ROBOT between MATCHES because of the distance between the FIELD and the pit area. For this reason, each Team is permitted to have three (3) additional “pit crew” members who can also help with needed ROBOT repairs/maintenance.

Only Team members wearing proper badges are allowed on the ARENA floor**.** *FIRST* will distribute these badges to the ALLIANCE CAPTAINS during the ALLIANCE CAPTAIN meeting, which takes place on the Division FIELDS. These badges will provide the necessary access to the ARENA for pit crew members.

Teams should assume they may be chosen for an ALLIANCE and think about the logistics of badge distribution and set a plan prior to the pairings. It is each ALLIANCE CAPTAIN’S responsibility to get the Team’s badges to the pit crew members.

5.6.2 Championship BACKUP ROBOT

If an ALLIANCE has not already used a BACKUP ROBOT, and an ALLIANCE ROBOT becomes inoperable during the Championship Playoffs and cannot continue, the ALLIANCE may request a BACKUP ROBOT. The ALLIANCE CAPTAIN will be presented the option of having one (1) of the three (3) Division Finalist ROBOTS, chosen randomly, from their Division join the ALLIANCE as a BACKUP ROBOT.

If an ALLIANCE has won their Division with a BACKUP ROBOT and moved on to the FRC Championship Playoffs, the BACKUP ROBOT continues to play for the ALLIANCE in the Championship Playoffs.

As noted in Section 5.4.2, the original ALLIANCE shall only have one (1) opportunity to use a BACKUP ROBOT. If the ALLIANCE has already used a BACKUP ROBOT during the Division Elimination MATCHES or the Championship Playoffs, they may not use a second BACKUP ROBOT. If a second ROBOT from the ALLIANCE becomes inoperable during the Championship Playoffs, then the ALLIANCE must play the remaining MATCHES with only two (2) (or even one(1)) ROBOTS.

5.6.3 FRC Championship MATCH Bracket

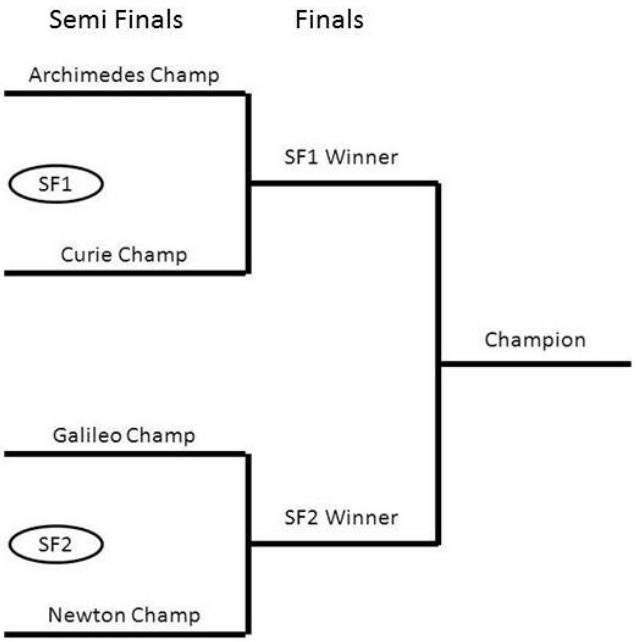

Figure 5-3: Championship Playoff MATCH Bracket

In order to allow time between MATCHES for all ALLIANCES, the order of play is as follows:

SF1-1, SF2-1, SF1-2, SF2-2, SF1-3*, SF2-3*

Any Semi-Final replays due to ties*

F-1, F-2, F-3*

Any Final replays due to ties*

(* - if required)

6 Glossary

***FIRST*®, the *FIRST*® logo, *FIRST*® Robotics Competition, FRC ®, Coopertition®, and Gracious Professionalism® are registered trademarks, and Sport for the Mind™ and ULTIMATE ASCENT℠ are common law trademarks, of the United States Foundation for Inspiration and Recognition of Science and Technology (*FIRST*®). ©2013*FIRST*. All rights reserved.**

6.1 ULTIMATE ASCENT Terms

ALLIANCE: a set of three Teams (four if counting a BACKUP ROBOT) who play ULTIMATE ASCENT together.

ALLIANCE CAPTAIN: a designated student representative from the ALLIANCE Lead.

ALLIANCE STATION: the area bounded by the ALLIANCE WALL, FEEDER STATIONS, LOW GOAL, white tape and carpet perimeter depicted in Figure 2.3.

ALLIANCE WALL: a 6 ½ ft high, 18 ft wide, wall that defines the ends of the FIELD.

ARENA: all elements of the game infrastructure required to play ULTIMATE ASCENT: the FIELD, the ALLIANCE STATIONS, the DISCS, and all supporting communications, ARENA control, and scorekeeping equipment.

AUTO: the first 15 seconds of the MATCH in which ROBOTS operate without direct DRIVER control.

AUTO LINE: a line, marked in Red or Blue gaffers tape, located 108 in. from and parallel to the CENTER LINE.

AUTO ZONE: an area on either end of the FIELD bounded by the ALLIANCE WALL, FEEDER STATIONS, LOW GOAL, GUARDRAILS, and the nearest AUTO LINE.

BACKUP TEAM: a Team used to replace an inoperable ROBOT on an ALLIANCE during Elimination MATCHES per Section 5.5.6.

BUMPER: a protective assembly designed to attach to the exterior of the ROBOT and constructed as specified in Section 4.1.6, BUMPER Rules.

BUMPER ZONE: the volume contained between two virtual horizontal planes, 2 in. above the floor and 10 in. above the floor.

CENTER LINE: the line, marked in White gaffers tape, which bisects the length of the FIELD.

CLIMBING/CLIMB: the action of ascending the PYRAMID, defined in Section 3.1.5.2.

COACH: a student or adult Mentor identified as the person wearing the designated "COACH" pin or button during a MATCH.

COMPONENT: any part in its most basic configuration, which cannot be disassembled without damaging or destroying the part or altering its fundamental function.

COTS: a “Commercial, Off-The-Shelf” COMPONENT or MECHANISM, in its unaltered, unmodified state. A COTS item must be a standard (i.e. not custom order) part commonly available from the VENDOR, available from a non-Team source, and available to all Teams for purchase.

Example 1: A Team orders two ROBOT grippers from RoboHands Corp. and receives both items. They put one in their storeroom and plan to use it later. Into the other, they drill “lightening holes” to reduce weight. The first gripper is still classified as a COTS item, but the second gripper is now a “custom part” as it has been modified.

Example 2: A Team obtains openly available blueprints of a drive component commonly available from Wheels-R-Us Inc. and has local machine shop “We-Make-It, Inc.”

manufacture a copy of the part for them. The produced part is NOT a COTS item, because it is not commonly carried as part of the standard stock of We-Make-It, Inc.

Example 3: A Team obtains openly available design drawings from a professional publication during the pre-season, and uses them to fabricate a gearbox for their ROBOT during the build period following Kickoff. The design drawings would be considered a COTS item, and may be used as “raw material” to fabricate the gearbox. The finished gearbox itself would be a FABRICATED ITEM, and not a COTS item.

Generally available software modules obtained from open sources (e.g. professional publications, commonly used FRC community-accessible web resources, industry source code repositories, etc.) that are not specifically affiliated with individual FRC Teams are considered COTS items.

DISABLED: a state in which a ROBOT has been commanded by the Driver Station to deactivate all outputs.

DISC: the game piece used in ULTIMATE ASCENT.

DISQUALIFIED: the status of a TEAM, as determined by the Head Referee, in which they receive zero (0) Qualification Points in a Qualification MATCH or receive zero (0) points in an Elimination MATCH.

DRIVER: a pre-college student TEAM member responsible for operating and controlling the ROBOT.

FABRICATED ITEM: any COMPONENT or MECHANISM that has been altered, built, cast, constructed, concocted, created, cut, heat treated, machined, manufactured, modified, painted, produced, surface coated, or conjured partially or completely into the final form in which it will be used on the ROBOT.

FEEDER: a pre-college TEAM member that feeds DISCS to ROBOTS.

FEEDER SLOT: an opening in a FEEDER STATION through which FEEDERS enter DISCS on to the FIELD.

FEEDER STATION: the FIELD border element containing the FEEDER SLOTS.

FIELD: the area bounded by and including the GUARDRAILS, ALLIANCE WALLS, LOW GOALS, and FEEDER STATIONS.

FIELD TIMEOUT: a TIMEOUT called by the Head Referee.

FOUL: a penalty assessed by a Referee which credits the opponent with three (3) points.

FRAME PERIMETER: the polygon defined by the outer-most set of exterior vertices on the ROBOT (without the BUMPERS attached) that are within the BUMPER ZONE. To determine the FRAME PERIMETER, wrap a piece of string around the ROBOT at the level of the BUMPER ZONE - the string describes this polygon.

Note: to permit a simplified definition of the FRAME PERIMETER and encourage a tight, robust connection between the BUMPERS and the FRAME PERIMETER, minor protrusions such as bolt heads, fastener ends, rivets, etc are excluded from the determination of the FRAME PERIMETER.

GOAL: a FIELD element in which DISCS are SCORED to earn points for an ALLIANCE.

GUARDRAIL: a system that borders the length of the FIELD and consists of horizontal pipes, vertical struts, and polycarbonate shields.

HIGH GOAL: the GOAL centered over the ALLIANCE WALL.

Kit of Parts (KOP): the collection of items listed on any *Kit of Parts Checklist*, available in *FIRST*® Choice, or obtained via a Product Donation Voucher (PDV)

LOADING ZONE: a trapezoidal area bounded by two (2) FEEDER STATIONS, an ALLIANCE WALL, a GUARDRAIL, and Red or Blue tape.

LOW GOAL: the GOAL located between a FEEDER STATION and ALLIANCE WALL.

MATCH: a two (2) minute and fifteen (15) second period of time in which ALLIANCES compete in ULTIMATE ASCENT.

MECHANISM: a COTS or custom assembly of COMPONENTS that provide specific functionality on the ROBOT. A MECHANISM can be disassembled (and then reassembled) into individual COMPONENTS without damage to the parts.

MIDDLE GOAL: a GOAL located above the ALLIANCE WALL and adjacent to the HIGH GOAL.

OPERATOR CONSOLE: the set of COMPONENTS and MECHANISMS used by the DRIVERS to relay commands to the ROBOT.

PLAYER STATION: a position behind the ALLIANCE WALL from where a TEAM operates their ROBOT.

PLAYING CONFIGURATION: The physical configuration and orientation of the ROBOT while playing the game (i.e. after the MATCH has started, and the ROBOT has deployed mechanisms, moved away from the starting location, and/or interacted with the field, GAME PIECES, or other ROBOTS). This configuration is dynamic, and may change multiple times during the course of a single MATCH.

PYRAMID: the Red or Blue steel structure on which ROBOTS CLIMB for points.

PYRAMID GOAL: a GOAL positioned on top of a PYRAMID.

RED CARD: a penalty assessed which DISQUALIFIES a TEAM, see Section 5.5.4.

ROBOT: an electromechanical assembly built by an FRC Team to perform specific tasks when competing in ULTIMATE ASCENT. It includes all of the basic systems required to be an active participant in the game: power, communications, control, mobility, and actuation. The implementation must obviously follow a design approach intended to play ULTIMATE ASCENT (e.g. a box of unassembled parts placed on the FIELD or a ROBOT designed to play a different game would not satisfy this definition).

SCORED: A DISC is considered SCORED in an ALLIANCE'S GOAL if any part of the DISC has crossed through the opening of the GOAL, is in the GOAL at the end of the MATCH, and the DISC is not in contact with any ROBOT from that ALLIANCE. Additionally, for a DISC to be considered SCORED in an ALLIANCE'S PYRAMID GOAL, it must correspond to the PYRAMID color.

STARTING CONFIGURATION: The physical configuration and orientation of the ROBOT when the MATCH is started. This is the state of the ROBOT immediately before being Enabled by the Field Management System, before the

ROBOT takes any actions, deploys any mechanisms, or moves away from the starting location. This configuration is static, and does not change during a single MATCH (although it may change from MATCH to MATCH). In the STARTING CONFIGURATION, no part of the ROBOT may extend outside the vertical projection of the FRAME PERIMETER, with the exception of minor protrusions such as bolt heads, fastener ends, rivets, etc.

If a ROBOT is designed as intended and pushed up against a vertical wall (in STARTING CONFIGURATION and with BUMPERS removed), only the FRAME PERIMETER (or minor protrusions) will be in contact with the wall.

STARTING LINE: the line, marked in White tape, located 4 ft. behind the ALLIANCE WALL behind which TEAM members must stay during AUTO.

SURROGATE: a Team randomly assigned by the Field Management System to play an extra Qualification MATCH, detailed in Section 5.3.2.

TEAM: 1 COACH, 2 DRIVERS, and 1 FEEDER from the same FRC Team.

TECHNICAL FOUL: a penalty assessed by a Referee which credits the opponent with twenty (20) points.

TELEOP: the remaining two (2)-minutes of a MATCH in which ROBOTS may be directly controlled by DRIVERS.

TIMEOUT: a period of up to six (6) minutes, which an ALLIANCE can use to pause Elimination MATCH progression.

VENDOR: a legitimate business source for COTS items that satisfies all of the following criteria:

A. has a Federal Tax Identification number. In cases where the VENDOR is outside of the United States, they must possess an equivalent form of registration or license with the government of their home nation that establishes and validates their status as a legitimate business licensed to operate within that country.
B. is not a “wholly owned subsidiary” of an FRC Team or collection of FRC Teams. While there may be some individuals affiliated with both an FRC Team and the VENDOR, the business and activities of the Team and VENDOR must be completely separable.
C. must be able to ship any general (i.e., non-*FIRST* unique) product within five business days of receiving a valid purchase request. It is recognized that certain unusual circumstances (such as 1,000 FIRST Teams all ordering the same part at once from the same VENDOR) may cause atypical delays in shipping due to backorders for even the largest VENDORs. Such delays due to higher-than-normal order rates are excused.
D. should maintain sufficient stock or production capability to fill Teams’ orders within a reasonable period during the build season (less than 1 week). (Note that this criterion may not apply to custom-built items from a source that is both a VENDOR and a fabricator. For example, a VENDOR may sell flexible belting that the Team wishes to procure to use as treads on their drive system. The VENDOR cuts the belting to a custom length from standard shelf stock that is typically available, welds it into a loop to make a tread, and ships it to a Team. The fabrication of the tread takes the VENDOR two weeks. This would be considered a Fabricated Item, and the two weeks ship time is acceptable.) Alternately, the Team may decide to fabricate the treads themselves. To satisfy this criterion, the VENDOR would just have to ship a length of belting from shelf stock (i.e. a COTS item) to the Team within five business days and leave the welding of the cuts to the Team.)
E. makes their products available to all FRC Teams. VENDOR must not limit supply or make a product available to just a limited number of FRC Teams.

The intent of this definition it to be as inclusive as possible to permit access to all

legitimate sources, while preventing ad hoc organizations from providing special-purpose products to a limited subset of Teams in an attempt to circumvent the cost accounting rules. *FIRST* desires to permit Teams to have the broadest choice of legitimate sources possible, and to obtain COTS items from the sources that provide them with the best prices and level of service available. Teams also need to protect against long delays in availability of parts that will impact their ability to complete their Robot. The FRC build season is brief, so the Vendor must be able to get their product, particularly FIRST unique items, to a Team in a timely manner. Ideally, chosen Vendors should have national distributors (e.g. Home Depot, Lowes, MSC, Radio Shack, McMaster-Carr, etc.). Remember, FRC events are not usually near home – when parts fail, local access to replacement materials is often critical.

VISION TARGET: a retro-reflective target, made of 3M 8830 Silver Marking Film, that may be used by ROBOTS to sense FIELD elements.

YELLOW CARD: a warning for egregious ROBOT or FRC Team member behavior.