ITEM NO.	PART NUMBER	DESCRIPTION	DRIVE BASE ASM DRAWING/QTY.	MATERIAL REQUIRED
1	TC-2009-060-000	ARCHIMEDES SCREW ASSEMBLY	1	
2	TC-2009-070-000	DRUM ASSEMBLY	1	
3	TC-2009-090-001	TRAILER HITCH CONNECTION BAR	1	KIT PART
4	TC-2009-090-002	TRAILER HITCH SPACER	1	KIT PART
5	TC-2009-095-100	FRONT RH BUMPER	1	
6	TC-2009-095-100	FRONT LH BUMPER	1	
7	TC-2009-095-100	REAR RH BUMPER	1	
8	TC-2009-095-100	REAR LH BUMPER	1	
9	TC-2009-095-300	SIDE BUMPER ASSEMBLY	2	
10	TC-2009-100-001	DRIVE BASEOUTSIDE PLATE	2	IFI MANUFACTURED SHEET METAL
11	TC-2009-100-002	DRIVE BASE INSIDE PLATE	1	IFI MANUFACTURED SHEET METAL
12	TC-2009-100-003	DRIVE BASE INSIDE PLATE	1	IFI MANUFACTURED SHEET METAL
13	TC-2009-100-004	REAR BOTTOM STIFFENER BRACKET	2	IFI MANUFACTURED SHEET METAL
14	TC-2009-100-005	FRONT TOP STIFFENER BRACKET	1	IFI MANUFACTURED SHEET METAL
15	TC-2009-100-006	FRONT BOTTOM STIFFENER BRACKET	2	IFI MANUFACTURED SHEET METAL
16	TC-2009-100-007	DRIVE AXLE BEARING BLOCK	2	TEAM MANUFACTURED PART
17	TC-2009-100-008	WHEEL SHAFT	4	TEAM MANUFACTURED PART
18	TC-2009-100-009	LEFT SIDE BALL INTAKE GUIDE	2	IFI MANUFACTURED SHEET METAL
19	TC-2009-100-010	RIGHT SIDE BALL INTAKE GUIDE	2	IFI MANUFACTURED SHEET METAL
20	TC-2009-100-011	DRUM SUPPORT BRACKET - BOTTOM U	1	CVC MANUFACTURED PART
21	TC-2009-100-012	DRUM SUPPORT BRACKET - BOTTOM U	1	CVC MANUFACTURED PART
22	TC-2009-100-013A	[0.527 I.D. X 0.049 WALL] TUBING	2	MCMASTER PART #89965K49
23	TC-2009-100-013B	[0.527 I.D. X 0.049 WALL] TUBING	2	MCMASTER PART #89965K49
24	TC-2009-100-013C	[0.527 I.D. X 0.049 WALL] TUBING	4	MCMASTER PART #89965K49
25	TC-2009-100-013D	[0.527 I.D. X 0.049 WALL] TUBING	4	MCMASTER PART #89965K49
26	TC-2009-100-014	LH LEXAN BALL INTAKE	1	TEAM MANUFACTURED PART
27	TC-2009-100-015	RH LEXAN BALL INTAKE	1	TEAM MANUFACTURED PART
28	TC-2009-110-000	THUNDERCHICKENS 2009 GEARBOX - RH	1	
29	TC-2009-111-000	THUNDERCHICKENS 2009 GEARBOX - LH	1	
30	TC-2009-130-000	Encoder Wheel	1	
31	TC-2009-132-000	Encoder Wheel	1	
32	TC-2009-150-000	INTAKE ROLLER ASSEMBLY	1	
33	AM-0077	[1/2] BORE KEYED HUB	2	UNMODIFIED ANDYMARK PART
34	AM-0162	AM #25 - 38 TOOTH SPROCKET	8	UNMODIFIED ANDYMARK PART
35	AM-0207	KIT WHEEL SPROCKET SPACER	8	UNMODIFIED ANDYMARK PART
36	AM-FR6-ZZ	3/8" ID SHIELDED FLANGE BALL BEARING	4	UNMODIFIED ANDYMARK PART
37	AM-FR8-ZZ	1/2" ID SHIELDED FLANGE BALL BEARING	2	UNMODIFIED ANDYMARK PART
38	SSHCM005080012C	M5 X 0.8 X 12.0 SOC HD DIN912	12	
39	SBNHM005080010C	M3 X 0.8 X 10.0 BTN HD ISO7380	4	
40	SBNHM005080016C	M3 X 0.8 X 16.0 BTN HD ISO7380	8	
41	09 FIRST Wheel with bearings		6	KIT PART
42	MMC 90278A331 (M6 SHOULDER)	M6 X 6 LONG SHOULDER BOLT	2	
43	nuthm005080000c	M5 X 0.8 NUT	2	
44	washer (M6 X 12 X 1-37)	MCMASTER CARR PART #95610A170	2	

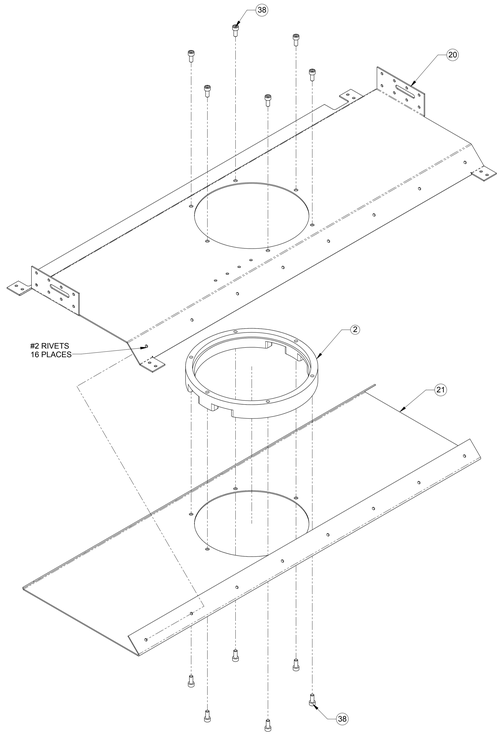

STEP 1

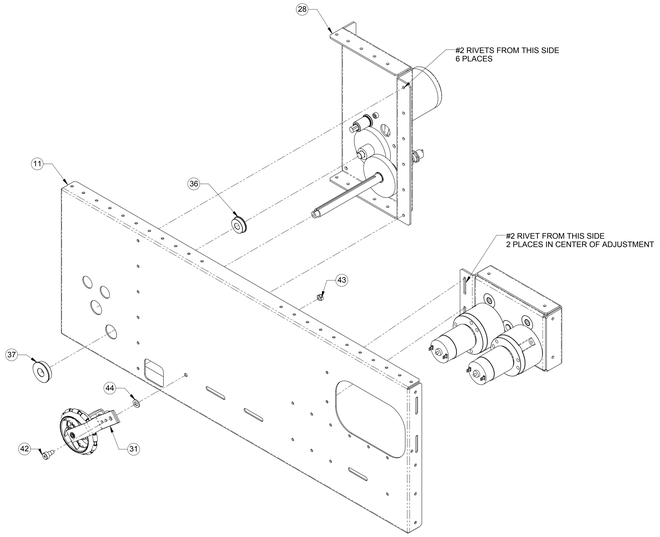

STEP 2

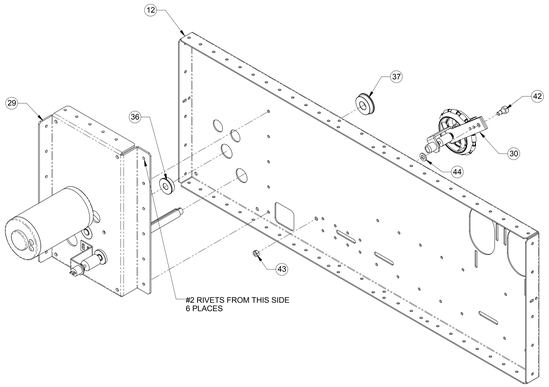

STEP 3

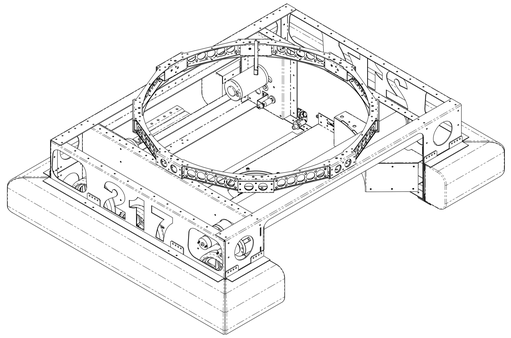

NOTE: FOR ALL RIVETS, REFERENCE "THUNDERCHICKEN 2009 RIVET TABLE" FOR PROPER RIVET SIZE.

ECN	REV	ZONE	CHANGE	DATE	BY
E#####	A		RELEASED	XX/XX/07	XX

DO NOT SCALE DRAWING

ALL GEOMETRIC DIMENSIONING AND TOLERANCING TO BE INTERPRETED PER THE AMERICAN NATIONAL STANDARD ASME Y14.5M - 1994.

METRIC

UNLESS OTHERWISE SPECIFIED:
ALL DIMENSIONS ARE IN MILLIMETERS.
ALL ONE PLACE DECIMAL DIMENSIONS ±0.2.
ALL TWO PLACE DECIMAL DIMENSIONS ±0.10
ALL MACHINED ANGLES ±0°-15'
C'SINK ALL TAPPED HOLES.
REMOVE ALL BURRS AND SHARP CORNERS.
UNFINISHED CASTING AND WELDMENT DIMENSIONS ±3.0
DO NOT DIMENSIONS ±3.0
DO NOT USE DIMENSIONS FOR MANUFACTURING.
DIMENSIONS IN [X.X] ARE IN INCHES.
ALL MACHINED SURFACES:
3.2 [125]

PART IDENTIFICATION, PRESERVATION, LABELING, AND PACKAGING SHALL BE IN ACCORDANCE WITH FANUC ROBOTICS SUPPLIER QUALITY ASSURANCE DOCUMENTS.

THIS MATERIAL IS THE EXCLUSIVE PROPERTY OF FANUC ROBOTICS AMERICA, INC., AND MUST BE RETURNED TO FANUC ROBOTICS AMERICA INC. IMMEDIATELY UPON REQUEST.

THIS MATERIAL AND THE INFORMATION ILLUSTRATED OR CONTAINED HEREIN MAY NOT BE REPRODUCED, COPIED, USED OR TRANSMITTED IN WHOLE OR PART IN ANY WAY WITHOUT THE PRIOR WRITTEN CONSENT OF FANUC ROBOTICS AMERICA, INC.

THUNDERCHICKENS
TEAM 217 - UTICA COMMUNITY SCHOOLS
FANUC ROBOTICS / FORD MOTOR COMPANY / B & K CORP

TITLE:
2009 DRIVE BASE ASSEMBLY

DRAWN BY: P. COPIOLI	DATE: 1/29/09
APPRV'D BY: PDC	DATE: 1/29/09
SHEET SIZE: 36 X 72	SCALE: 1:2 AND AS NOTED
SHEET NO. TOTAL SHEETS	DRAWING PART NO./PART NO.
1 4	TC-2009-100-000

PRINTED: Friday, January 30, 2009 12:53:27 PM

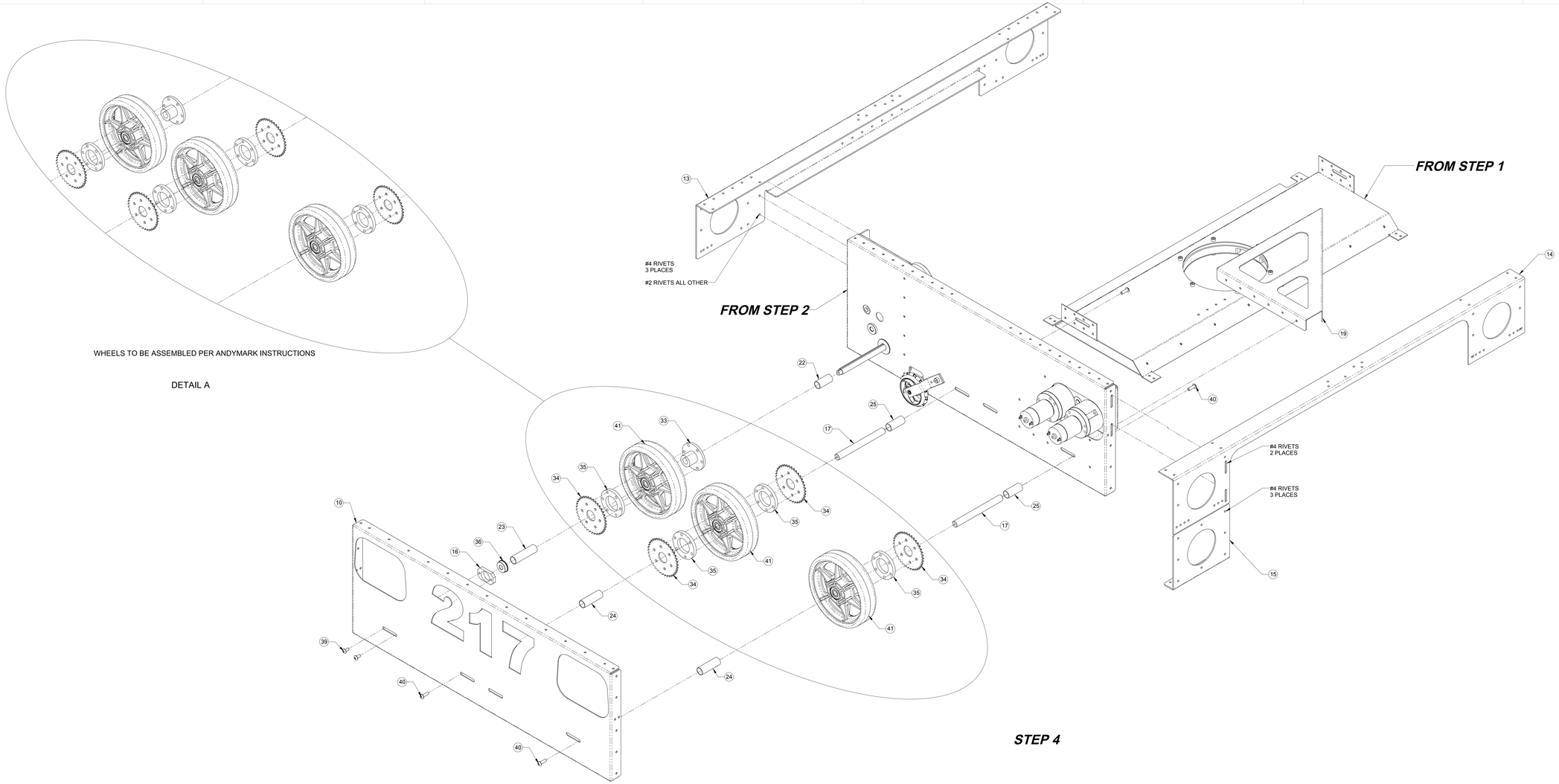

NOTE: FOR ALL RIVETS, REFERENCE "THUNDERCHICKEN 2009 RIVET TABLE" FOR PROPER RIVET SIZE.

ECN	REV	ZONE	CHANGE	DATE	BY
E#####	A		RELEASED	XX/XX/07	XX

DO NOT SCALE DRAWING

ALL GEOMETRIC DIMENSIONING AND TOLERANCING TO BE INTERPRETED PER THE AMERICAN NATIONAL STANDARD ASME Y14.5M - 1994.

METRIC

UNLESS OTHERWISE SPECIFIED
ALL DIMENSIONS ARE IN MILLIMETERS.
ALL ONE PLACE DECIMAL DIMENSIONS ±0.2.
ALL TWO PLACE DECIMAL DIMENSIONS ±0.10
ALL MACHINED ANGLES ±0°-15'
C'SINK ALL TAPPED HOLES.
REMOVE ALL BURRS AND SHARP CORNERS.
UNFINISHED CASTING AND WELDMENT DIMENSIONS ±3.0
DO NOT DIMENSIONS ±3.0
ALL DIMENSIONS ARE GIVEN FOR MANUFACTURING.
DIMENSIONS IN [X.X] ARE IN INCHES.
ALL MACHINED SURFACES:
3.2/ [125/]

PART IDENTIFICATION, PRESERVATION, LABELING, AND PACKAGING SHALL BE IN ACCORDANCE WITH FANUC ROBOTICS SUPPLIER QUALITY ASSURANCE DOCUMENTS.

THIS MATERIAL IS THE EXCLUSIVE PROPERTY OF FANUC ROBOTICS AMERICA, INC., AND MUST BE RETURNED TO FANUC ROBOTICS AMERICA INC. IMMEDIATELY UPON REQUEST.

THIS MATERIAL AND THE INFORMATION ILLUSTRATED OR CONTAINED HEREIN MAY NOT BE REPRODUCED, COPIED, USED OR TRANSMITTED IN WHOLE OR PART IN ANY WAY WITHOUT THE PRIOR WRITTEN CONSENT OF FANUC ROBOTICS AMERICA, INC.

THUNDERCHICKENS
TEAM 217 - UTICA COMMUNITY SCHOOLS
FANUC ROBOTICS / FORD MOTOR COMPANY / B & K CORP

TITLE:
2009 DRIVE BASE ASSEMBLY

DRAWN BY: P. COPIOLI	DATE: 1/29/09
APPRV'D BY: PDC	DATE: 1/29/09
SHEET SIZE: 36 X 72	SCALE: 1:2 AND AS NOTED
SHEET NO. TOTAL SHEETS	DRAWING PART NO./PART NO.
2 4	TC-2009-100-000

PRINTED: Friday, January 30, 2009 12:53:27 PM

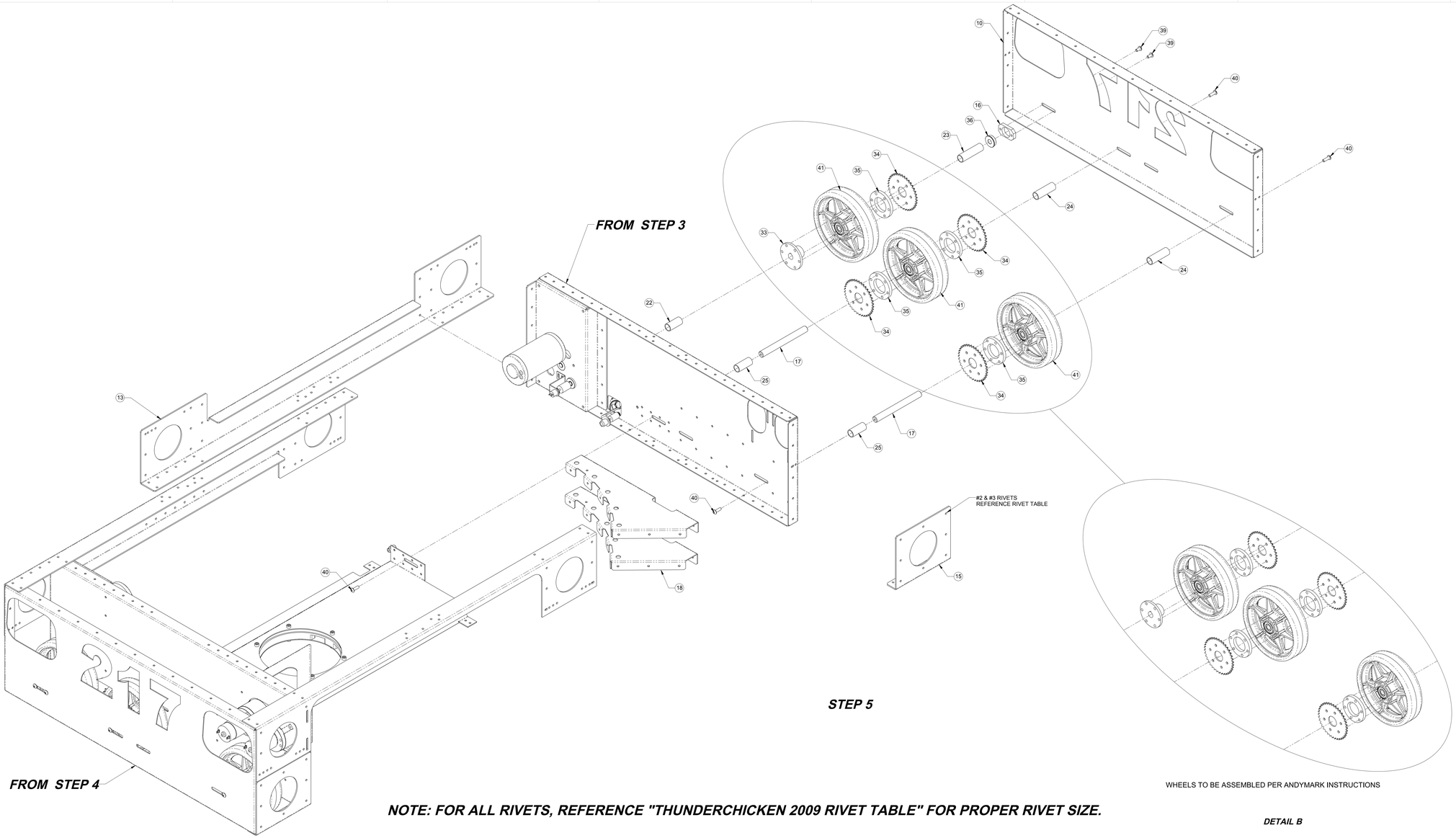

NOTE: FOR ALL RIVETS, REFERENCE "THUNDERCHICKEN 2009 RIVET TABLE" FOR PROPER RIVET SIZE.

ECN	REV	ZONE	CHANGE	DATE	BY
E#####	A		RELEASED	XX/XX/07	XX

DO NOT SCALE DRAWING

ALL GEOMETRIC DIMENSIONING AND TOLERANCING TO BE INTERPRETED PER THE AMERICAN NATIONAL STANDARD ASME Y14.5M - 1994.

METRIC

UNLESS OTHERWISE SPECIFIED:
ALL DIMENSIONS ARE IN MILLIMETERS.
ALL ONE PLACE DECIMAL DIMENSIONS ±0.2.
ALL TWO PLACE DECIMAL DIMENSIONS ±0.10
ALL MACHINED ANGLES ±0°-15'
C'SINK ALL TAPPED HOLES.
REMOVE ALL BURRS AND SHARP CORNERS.
UNFINISHED CASTING AND WELDMENT DIMENSIONS ±3.0
DO NOT USE DIMENSIONS ±3.0 DIMENSIONS FOR MANUFACTURING.
DIMENSIONS IN [X.X] ARE IN INCHES.
ALL MACHINED SURFACES:
3.2/ [125/]

PART IDENTIFICATION, PRESERVATION, LABELING, AND PACKAGING SHALL BE IN ACCORDANCE WITH FANUC ROBOTICS SUPPLIER QUALITY ASSURANCE DOCUMENTS.

THIS MATERIAL IS THE EXCLUSIVE PROPERTY OF FANUC ROBOTICS AMERICA, INC., AND MUST BE RETURNED TO FANUC ROBOTICS AMERICA INC. IMMEDIATELY UPON REQUEST.

THIS MATERIAL AND THE INFORMATION ILLUSTRATED OR CONTAINED HEREIN MAY NOT BE REPRODUCED, COPIED, USED OR TRANSMITTED IN WHOLE OR PART IN ANY WAY WITHOUT THE PRIOR WRITTEN CONSENT OF FANUC ROBOTICS AMERICA, INC.

THUNDERCHICKENS
TEAM 217 - UTICA COMMUNITY SCHOOLS
FANUC ROBOTICS / FORD MOTOR COMPANY / B & K CORP

TITLE:
2009 DRIVE BASE ASSEMBLY

DRAWN BY: P. COPIOLI	DATE: 1/29/09
APPRV'D BY: PDC	DATE: 1/29/09
SHEET SIZE: 36 X 72	SCALE: 1:2 AND AS NOTED
SHEET NO. TOTAL SHEETS	DRAWING PART NO./PART NO.
3 4	TC-2009-100-000

PRINTED: Friday, January 30, 2009 12:53:27 PM

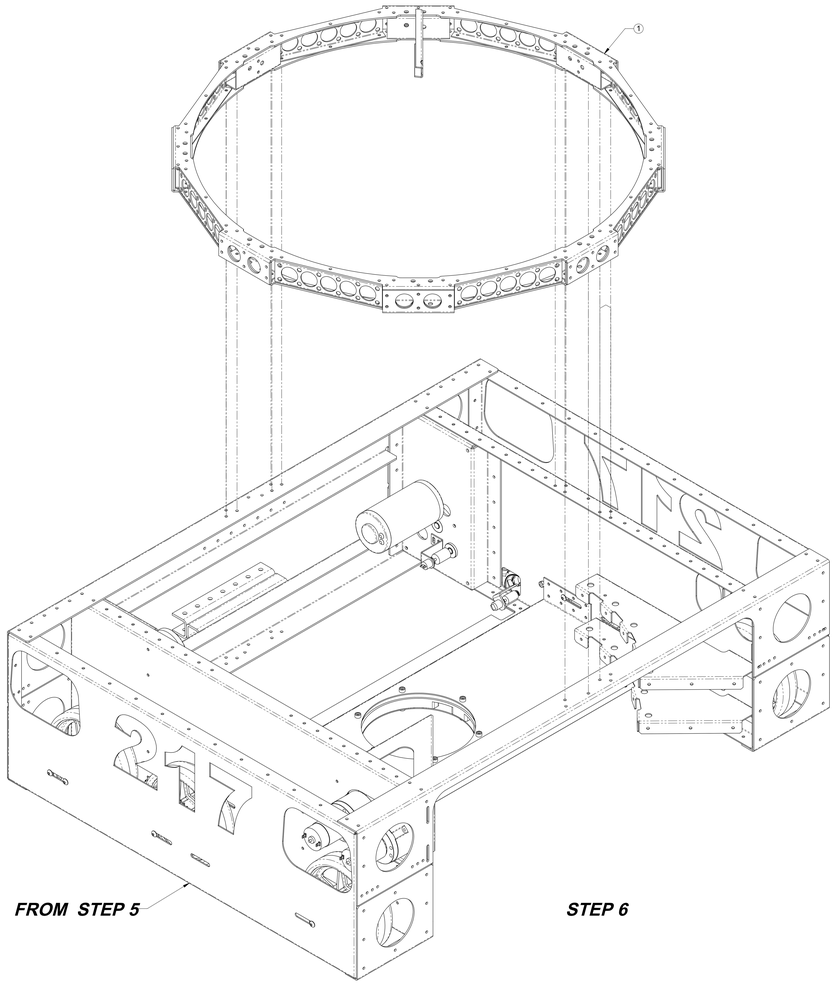

STEP 6

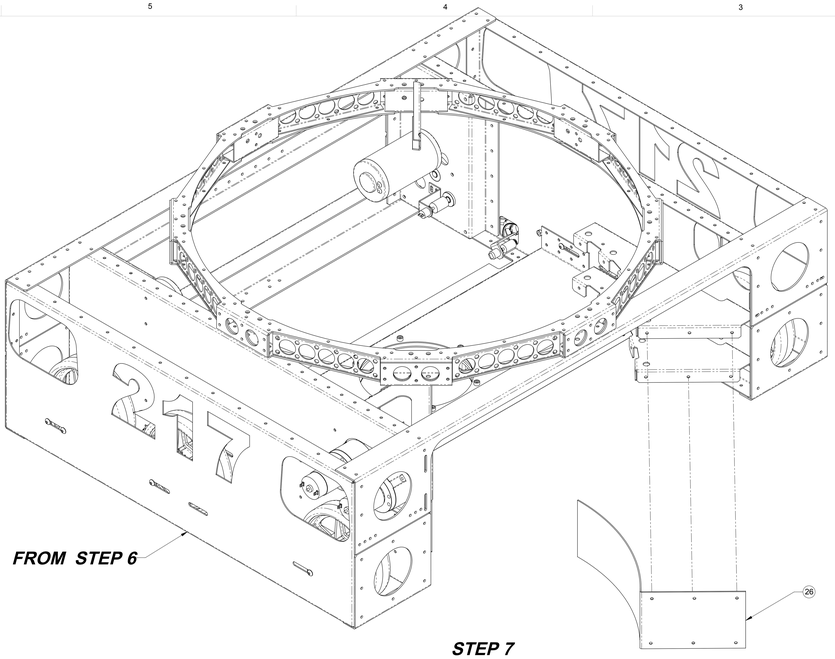

STEP 7

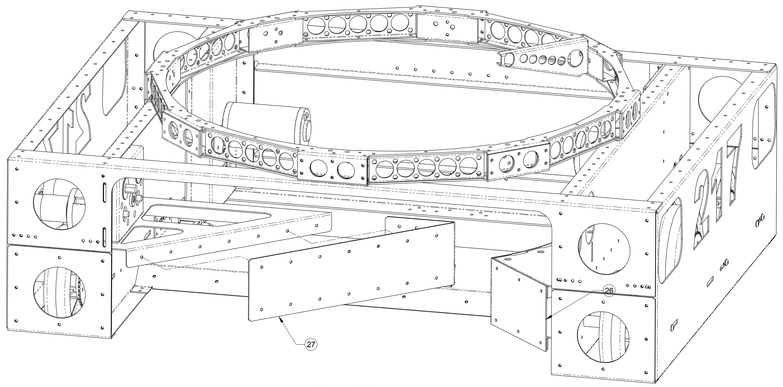

STEP 8

NOTE: FOR ALL RIVETS, REFERENCE "THUNDERCHICKEN 2009 RIVET TABLE" FOR PROPER RIVET SIZE.

ECN	REV	ZONE	CHANGE	DATE	BY
E#####	A		RELEASED	XX/XX/07	XX

DO NOT SCALE DRAWING

ALL GEOMETRIC DIMENSIONING AND TOLERANCING TO BE INTERPRETED PER THE AMERICAN NATIONAL STANDARD ASME Y14.5M - 1994.

METRIC

UNLESS OTHERWISE SPECIFIED
ALL DIMENSIONS ARE IN MILLIMETERS.
ALL ONE PLACE DECIMAL DIMENSIONS ±0.2.
ALL TWO PLACE DECIMAL DIMENSIONS ±0.10
ALL MACHINED ANGLES ±0°-15'
C'SINK ALL TAPPED HOLES.
REMOVE ALL BURRS AND SHARP CORNERS.
UNFINISHED CASTING AND WELDMENT DIMENSIONS ±3.0
DO NOT USE MICROMETERS.
DO NOT USE DIMENSIONS FOR MANUFACTURING.
DIMENSIONS IN [X.X] ARE IN INCHES.
ALL MACHINED SURFACES:
3.2/ [125/]

PART IDENTIFICATION, PRESERVATION, LABELING, AND PACKAGING SHALL BE IN ACCORDANCE WITH FANUC ROBOTICS SUPPLIER QUALITY ASSURANCE DOCUMENTS.

THIS MATERIAL IS THE EXCLUSIVE PROPERTY OF FANUC ROBOTICS AMERICA, INC., AND MUST BE RETURNED TO FANUC ROBOTICS AMERICA INC. IMMEDIATELY UPON REQUEST.

THIS MATERIAL AND THE INFORMATION ILLUSTRATED OR CONTAINED HEREIN MAY NOT BE REPRODUCED, COPIED, USED OR TRANSMITTED IN WHOLE OR PART IN ANY WAY WITHOUT THE PRIOR WRITTEN CONSENT OF FANUC ROBOTICS AMERICA, INC.

THUNDERCHICKENS
TEAM 217 - UTICA COMMUNITY SCHOOLS
FANUC ROBOTICS / FORD MOTOR COMPANY / B & K CORP

TITLE:
2009 DRIVE BASE ASSEMBLY

DRAWN BY: P. COPIOLI	DATE: 1/29/09
APPRV'D BY: PDC	DATE: 1/29/09
SHEET SIZE: 36 X 72	SCALE: 1:2 AND AS NOTED

SHEET NO.	TOTAL SHEETS	DRAWING PART NO./PART NO.
4	4	TC-2009-100-000

PRINTED: Friday, January 30, 2009 12:53:27 PM