ECN	REV	ZONE	CHANGE	DATE	BY
E######	A		RELEASED	XX/XX/01	XX

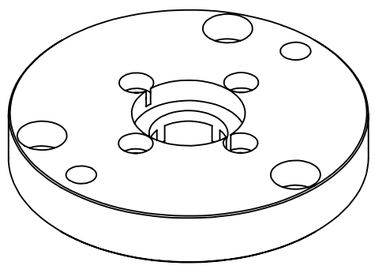

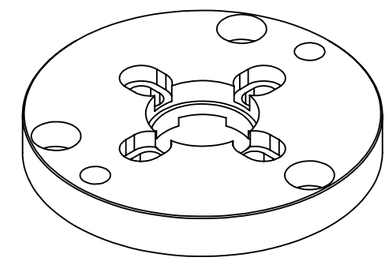

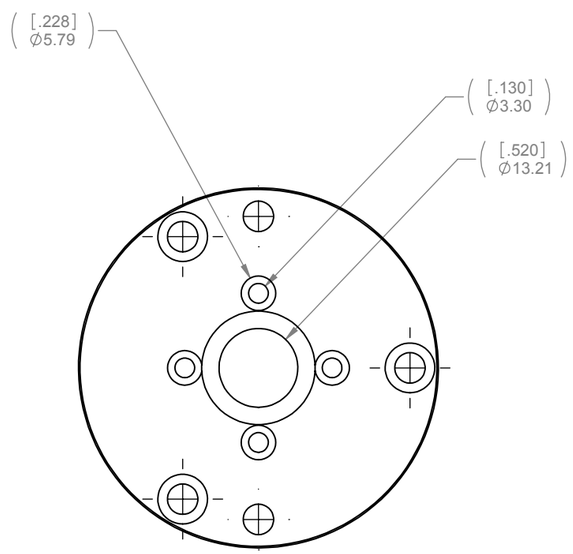

UNALTERED STOCK PART

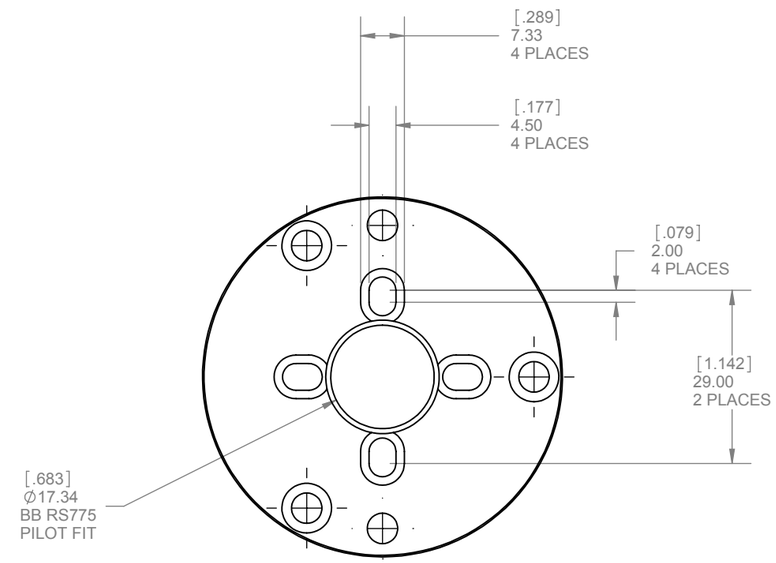

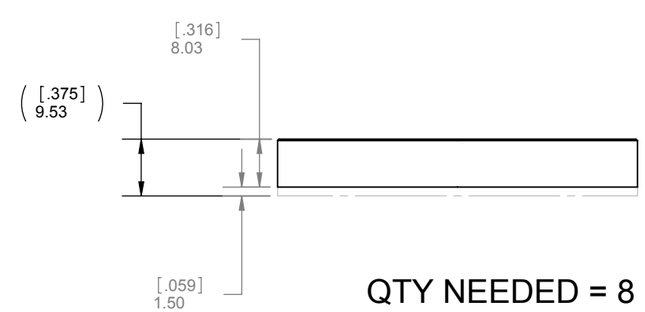

QTY NEEDED = 8

SolidWorks Student Edition.
For Academic Use Only.

DO NOT SCALE DRAWING

ALL GEOMETRIC DIMENSIONING AND TOLERANCING TO BE INTERPRETED PER THE AMERICAN NATIONAL STANDARD ASME Y14.5M - 1994.

METRIC

UNLESS OTHERWISE SPECIFIED
ALL DIMENSIONS ARE IN MILLIMETERS.
ALL ONE PLACE DECIMAL DIMENSIONS ±0.2.
ALL TWO PLACE DECIMAL DIMENSIONS ±0.10
ALL MACHINED ANGLES ±0°-15'
C'SINK ALL TAPPED HOLES.
REMOVE ALL BURRS AND SHARP CORNERS.
UNFINISHED CASTING AND WELDMENT DIMENSIONS ±3.0
BURNOUT DIMENSIONS ±3.0
DO NOT USE REF. DIMENSIONS FOR MANUFACTURING.
DIMENSIONS IN [X.X] ARE IN INCHES.
ALL MACHINED SURFACES:
3.2 [125]

PART IDENTIFICATION, PRESERVATION, LABELING, AND PACKAGING SHALL BE IN ACCORDANCE WITH FANUC ROBOTICS SUPPLIER QUALITY ASSURANCE DOCUMENTS.

THIS MATERIAL IS THE EXCLUSIVE PROPERTY OF FANUC ROBOTICS AMERICA, INC., AND MUST BE RETURNED TO FANUC ROBOTICS AMERICA INC. IMMEDIATELY UPON REQUEST.

THIS MATERIAL AND THE INFORMATION ILLUSTRATED OR CONTAINED HEREIN MAY NOT BE REPRODUCED, COPIED, USED OR TRANSMITTED IN WHOLE OR PART IN ANY WAY WITHOUT THE PRIOR WRITTEN CONSENT OF FANUC ROBOTICS AMERICA, INC.

THUNDERCHICKENS
TEAM #217 - UTICA COMMUNITY SCHOOLS
FANUC ROBOTICS / FORD MOTOR COMPANY / B & K CORP

TITLE:
BANEBOT RS775 INPUT PLATE

DRAWN BY: JLM	DATE: 1/15/2011
APPRV'D BY: PDC	DATE: 1/15/2011
SHEET SIZE: B	SCALE: 1:1 AND AS NOTED

SHEET NO.	TOTAL SHEETS	DRAWING PART NO./PART NO.
1	1	TC-2011-110-011

PRINTED: Sunday, January 16, 2011 6:06:58 PM