How to Make Stuff with Laser-cut Plywood

Cal Miller
calder.miller@gmail.com

Introduction

Laser-cut plywood assemblies can be strong, lightweight, precise and can be designed and fabricated quickly at low cost. For many mechanical and structural projects, laser cutting plywood presents advantages over using other fabrication techniques, being much faster than 3D printing and manual or CNC machining, allowing superior tolerances to 3D printing and all but the most careful manual machining, and yielding parts that, if properly designed, can have structural properties comparable to metal assemblies and far superior to 3D printed plastic, all while using low-cost materials. In this guide, I describe my laser cutting workflow from SolidWorks to Inkscape to machine operation, share some design and manufacturing tips I have learned while building laser-cut systems and list other helpful resources. This guide refers specifically to using SolidWorks, Inkscape and the Trotec Speedy 300 laser at Xerocraft Hackerspace, but much of the content remains relevant with different software or equipment.

Design and Fabrication Information

- Basic Concepts
  - Materials
    - Baltic Birch Plywood - High quality hardwood plywood with an attractive appearance and excellent structural properties. More costly than most plywood but still inexpensive (~$20 for a 60x60x0.25” sheet of Baltic Birch Plywood from Woodworkers’ Source). My favorite material and the primary subject of this guide. More information from Hackaday and Woodworkers’ Source.
    - Medium Density Fiberboard - Cheap and uniform but uglier and much weaker than birch plywood. More information from Hackaday.
    - Delrin - A strong engineering plastic good for making small parts. Delrin melts somewhat when cut; thin (≤ 0.125”) sheets cut better. More information from Hackaday.
    - Acrylic - Transparent or colored plastic sheet that laser cuts and engraves well. Acrylic is reasonably strong but expensive, heavy and vulnerable to impacts.
    - Cardstock - Cheap and very fast to cut. Good for making stencils and prototyping geometry but should be avoided for structural parts.
  - Thickness - Baltic Birch plywood thicknesses are actually metric, not imperial (see table). The imperial approximations are fine most of the time, though proper dimensions are critical for press fits.

Thickness (mm)	Thickness (in)	Approximate Fractional Thickness (in)
3	0.118	⅛

○ 6	○ 0.236	○ ¼
○ 9	○ 0.354	○ ⅜

        - Up to ~0.375” birch plywood can be cut on Xerocraft’s laser, but cutting thinner material is faster and yields parts with less tapered edges. I most frequently use 0.25” and 0.125” plywood.
    - Kerf - Width of cut. ~0.006” for Trotec Speedy 300 at Xerocraft. If precise fits are needed, it is important to account for kerf by increasing the size of tabs and/or reducing the size of holes and slots. Kerf can be measured by cutting several blocks and measuring how their size, when stacked, differs from the nominal dimensions.
    - Fasteners
        - Nuts and bolts - Most laser-cut plywood structures that I have designed are assembled with nuts and bolts. Nuts and bolts allow disassembly of structures, as opposed to the other techniques described below. Nuts and bolts can either be used to clamp parallel plates together, or, in t-slots (and typically in conjunction with finger-joints, described below), to attach perpendicular parts. Connecting parallel plates is straightforward; note that the head of the nut can be captured in a laser-cut hexagon so no wrench is required. Some tips for t-slots and hardware selection are described below.

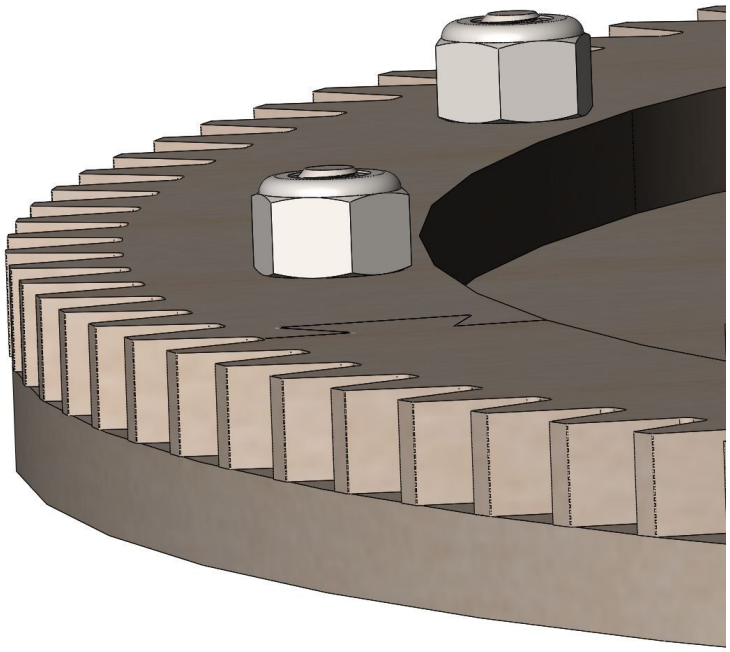

In the azimuth drive for an antenna mount, nuts and bolts are used to attach a gear to the base. Flat-head screws are installed from the bottom.

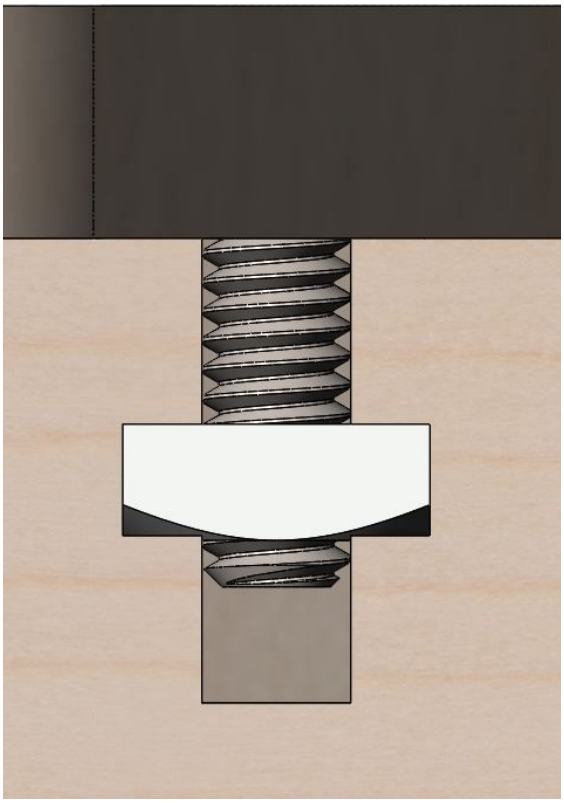

t-slots are used to connect perpendicular plates. The nut is retained in a slot, while the cutout below allows the screw to fully pass through the nut.

- Nuts in t-slots can offset to simplify assembly; nuts can be pressed flush with the wood rather than having to be centered.

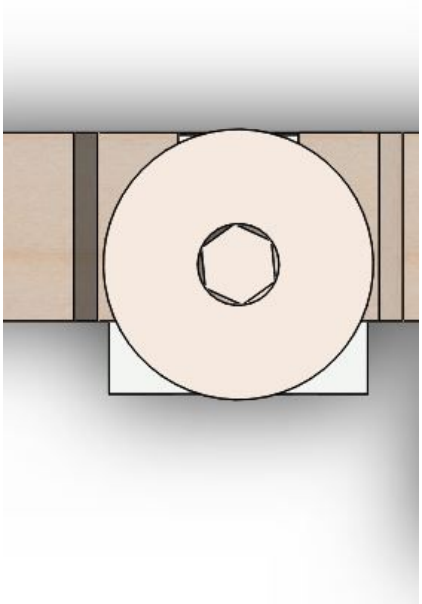

A top view of a t-slot shows the offset nut.

- A hammer or pliers are suggested to install tight fitting nuts.
- Square nuts are preferable to hex nuts because the flat sides make them easier to install.
- Flat-head screws can be used if insufficient clearance is available for screw heads. The parts must be countersunk after cutting.
- Blue Loctite (medium strength) should be used to retain nuts on assemblies that experience vibration.
- I use 8-32 square nuts and 8-32x5/8” pan head (or flat head) screws for 0.25” plywood. Smaller hardware is suggested for thinner wood.
- Torx screws are the easiest to install but expensive; hex head are a good alternative. Phillips and flat-head screws are prone to slipping and should be avoided when possible.
- Do not overtighten t-slot nuts, or the wood around them can be damaged.

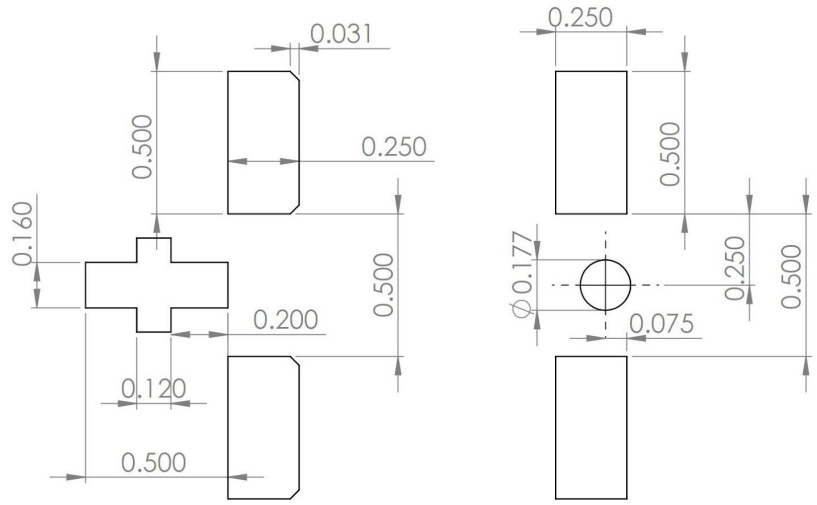

A dimensioned drawing of the 8-32 tabs and slots with t-nuts that I use

- Wood glue - Can be very strong and used where other fasteners are impractical, but impossible to disassemble and potentially messy. Allow lots of contact area and tightly clamp parts together.
- Rivets - Blind rivets can be used to metal plates or extrusions to wood sheets. Ensure that the rivet is properly sized for the thickness of the material. Riveted structures should be designed so rivets do not experience large tensile loads.

- Press fits - Compensate for kerf plus ~0.001” of overlap for an interference fit between parts. If done well, no additional fasteners may be required. Press fits are useful for retaining pins and bearings.
- Types of operation - Several kinds of operations are possible with the laser. Different operations can be combined in one job. Operations possible include:
  - Cutting - Cutting all the way through the material. Often low speed, high power, one to several passes. I use red or blue in Trotec JobControl.
  - Vector Engraving - Cutting only partway through the material to mark it. Fairly high speed and high power, one or two passes. Faster and looks better than raster engraving. Produces a thin line. I use green in Trotec JobControl.
  - Raster Engraving - Repeated scans engrave a pixelated image. Several grayscale types exist in Trotec JobControl print settings. High speed, high power, one or two passes. Can be slow for large areas. I use black in Trotec JobControl.

- Methods of construction
    - Boxes - Like sheet metal, laser-cut plywood is strong in the plane of the material but weak to out-of-plane bending loads. Through placing plywood sheets in different planes, boxes are strong against loads in all directions. Since multiple interlocking parts must be designed, boxes are more involved to design than other types of structures, but can be the most precise (since all tolerances are driven by the laser cutter) and rigid structures. See "How to Build your Everything Really Really Fast" for lots more on structures.

Part of a Bit Buckets prototype drivetrain, showing a box constructed with finger joints.

    - Space frame - Laser-cut gussets can be used to connect aluminum tube or lumber struts, creating two or three-dimensional trusses. This method of construction can be strong, particularly if large gussets are used, but tolerances will not match structures built with finger joints unless care is taken in assembly. This method is particularly useful for building large structures and is much faster to design for than finger-jointed construction. Consider rivets for attaching to metal or wood screws for attaching to lumber struts.

The superstructure for the 2014 Bit Buckets robot was largely made from square aluminum tubing connected with (neon green!) laser-cut plywood gussets.

- Bent wood - Many small slots can be cut allowing the wood to bend. I personally have not used this method, but [others have used it to make interesting objects and patterns](), although I have not seen examples of structural or mechanical use.

An example of bent laser-cut plywood. From "[Laser-Cut Book Covers]()" by Craig

Couden

- Stacked plates - Structures can be built from stacked laser-cut plates, held together with glue or screws. Pins can be pressed into holes to precisely align parts. Complex 3D shapes be created in a similar fashion to 3D printed objects.

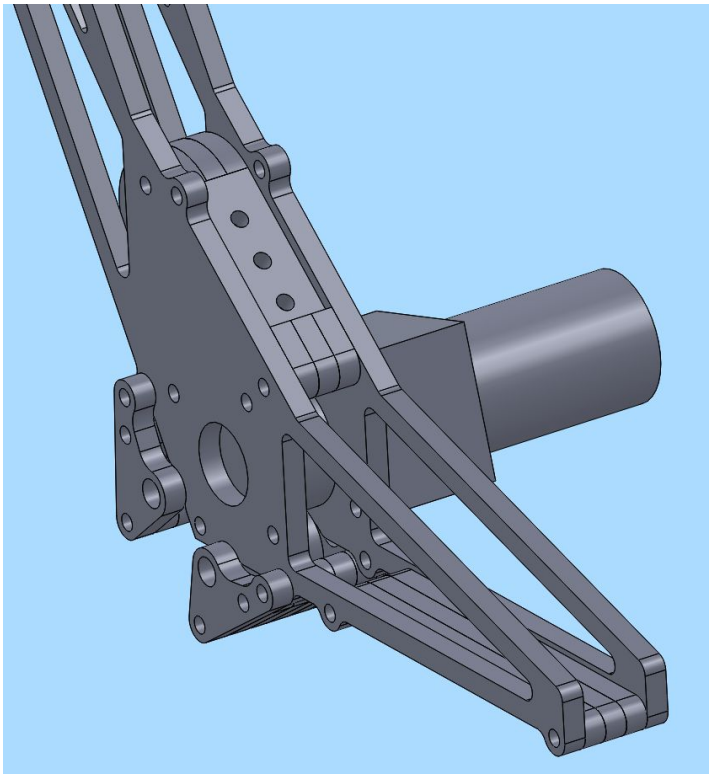

A CAD render by Steven Forbes of an early version of the 2015 Bit Buckets canburglar mechanism showing stacked plate construction.

- Laser Cutter Joinery
  - Finger joints
    - Finger joints can be used to connect perpendicular plates. They prevent planar motion and limit bending, but may slide apart. Therefore, they are often held together with t-slots (see above). Finger joints can be closed (below) or open (2 below), which allows the parts an additional degree of freedom.

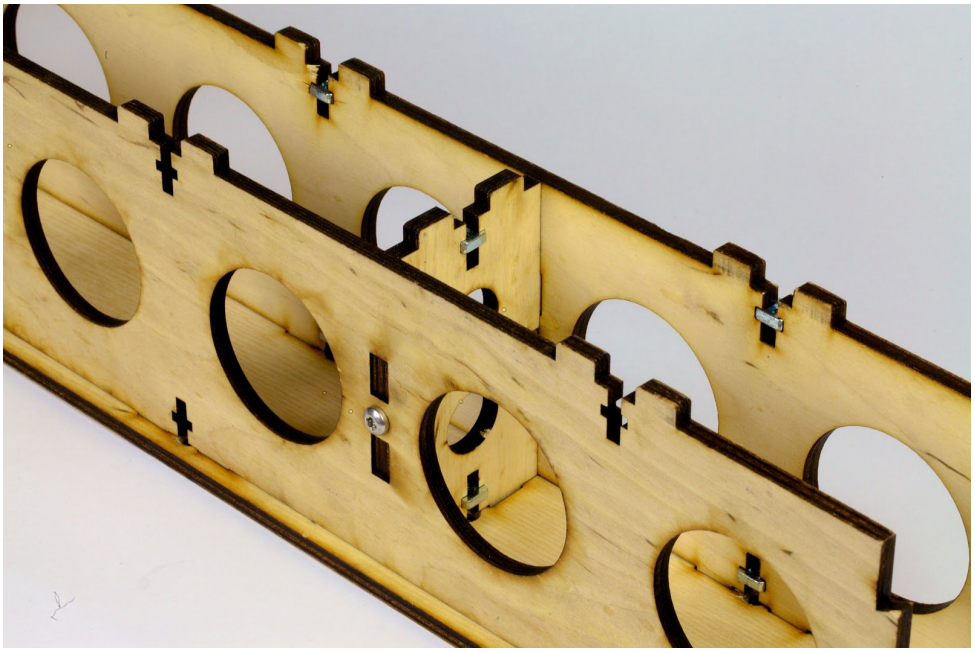

A section of the Bit Buckets' 2015 robot's elevator showing finger joint and t-slot construction

- For maximum strength, put non-captive tabs and slots on both sides of a seam; each nut can be pulled sideways out from a slot, but with nuts along both surfaces, the seam cannot come undone.

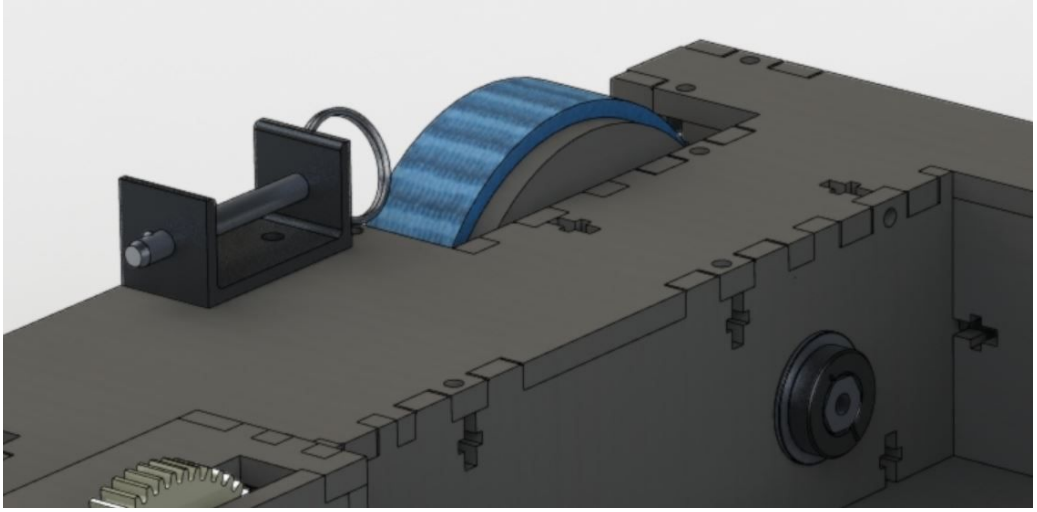

A detail from an FRC drivetrain I designed showing open finger joints on both sides of a seam.

- Chamfering the corners of the tabs in a finger joint is suggested for easy assembly.

        - Tighter finger joints are more precise; looser ones are easier to assemble, but allow more sliding and bending.

    - Dovetail joints - Dovetail joints, tapered tabs that fit into matching slots are used to connect planar parts with good strength and precision. Parts are fully constrained in-plane, but can slide out-of plane, so another means of attachment is needed for rigid joints. For the tightest fit, the joints should be compensated for laser fits by enlarging the tabs or shrinking the slots.

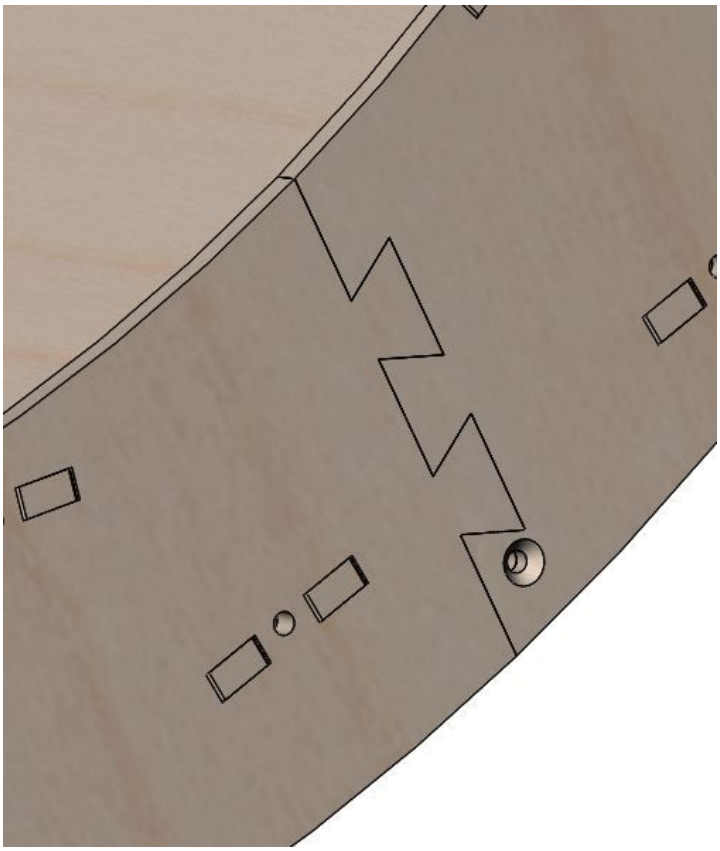

Dovetail joints are used to connect sections of the structure for a laser-cut plywood mount for a radio dish.

- Miscellaneous Tips
    - Making stencils - Detailed painted graphics can be applied to laser-cut parts if the surface is covered in masking tape, the outlines of the graphics are vector engraved with the laser, the tape covering the areas to be painted is peeled off, the edges of the remaining tape are pressed down with the back of a spoon to prevent the paint from leaking, and the part spray painted.
    - Larger parts - Parts up to 29x34” can be cut on the Trotec Speedy 300 in two operations. For the larger material to fit, the door must be opened and its safety switches overridden with magnets. One side of the part is cut. At the same time,

marks are engraved on opposite sides of the part to align the second operation. Then the material is rotated so the other side is in the laser and aligned rotationally by moving the laser horizontally between the engraved marks, ensuring that the red pointer crosses both at the same height and translationally by moving the laser pointer to a known reference point. Once the part is aligned, a second set of reference marks are engraved and their position is compared to the originals. Either the position of material or of the laser job is adjusted until the marks are aligned and the second cut is begun. Tolerances on the order of 0.01” can be attained by this method.

- Cut order - Trotec JobControl cuts colors in a certain order: black, red, blue, blue-grey, cyan, green, etc. For maximum precision, choose the colors for your job so internal features of your part are cut or engraved before the outlines, as parts may shift or warp when their outlines are cut.

SolidWorks Workflow

- Sketch Philosophy - I like to define as much as possible for a part or assembly in one layout sketch that other parts or features reference. That way, changes in the layout sketch easily propagate to the rest of the model. For more complex assemblies, I will put the tabs and slots in a separate sketch from the layout so they can be added afterwards and more easily changed.
- Sketch Blocks - Used for common features like tabs and slots and dovetails (and more like motor flanges or circuit board mounting holes). Sketch blocks can be dragged and dropped into a sketch and constrained like regular sketch geometry. Using them is much faster than redrawing geometry each time it is used.
- Patterns and Symmetry - In creating sketches, parts and assemblies, I use patterns and symmetry whenever possible to make parts to save time drawing or modifying many individually created instances of a feature.
- Configurations - Use Configurations to share geometry between multiple related parts, saving time and facilitating modifications.
- I have designed laser-cut assemblies as assemblies of independent parts, multibody parts, and assemblies with parts that refer to each other. Assemblies of independent parts are the slowest to draw and modify but the most stable and easy to diagnose. Assemblies with parts that refer to each other are faster but often break in confusing ways. Multibody parts are fast to model and edit, but can be annoying to make drawings for, as each body must be shown independently from the proper angle.
- Drawings - To laser cut a SolidWorks model, drawings of the parts must be created. In SolidWorks, create a drawing, resize the sheet to match the size of your material, delete the sheet format (otherwise those lines will be cut), and insert drawing views of the parts to be cut. Make sure the parts are displayed in 1:1 scale and any extraneous details (points, center marks, origin) are deleted or hidden. I tend to layout the whole laser bed in a SolidWorks drawing, although multiple drawings of parts may also be saved separately and combined in Inkscape. Save the drawings in PDF format.

Inkscape Workflow

- Open the SolidWorks drawing. Accept the default settings on PDF import dialog.
- If the drawing was created with a student version of SolidWorks, delete the text "SOLIDWORKS Student Edition. For Academic Use Only."
- Select all (Ctrl-a). Combine paths into a compound path (Ctrl-k).
- Switch to the "Edit Paths by Node" mode (F2). Select all (Ctrl-a).
- On the toolbar, click the "Join Selected Nodes" button to ensure that the laser cuts each outline as a continuous path, rather than cutting each segment separately.
- Switch to "Select and Transform Objects Mode" (F1).
- Select all and, using the "Fill and Stroke" pane, (Shift-Ctrl-F), set the Fill to "No Paint", Stroke Paint to "Flat Color" and the appropriate color for your Trotec JobControl material setting (R:255, G:0, B:0 is the most common for cuts), and "Width", under "Stroke Style" to 0.1 mm.
- If required by your design, break up your drawing into its constituent paths, using Ungroup (Shift-Ctrl-G) and Break Apart (Shift-Ctrl-K) as appropriate (see the status bar for information about the current selection). Then select the relevant paths and set the Stroke Paint to the proper color, as defined by your Trotec JobControl material setting.
- Print (Ctrl-p) and select the destination as Trotec JobControl. Review the settings in the Print dialog and the printer "Preferences" window before confirming the print.

Laser cutting workflow

- Setup
    - Preparing materials
        - The Trotec Speedy 300's bed is 29x17", so (almost; see "Larger Parts" above) any materials cut must be that size or smaller. Use the table saw to cut wood or plastics to size.
    - Hardware
        - Laser checks
            - Is the machine on?
            - Is the exhaust blower running?
            - Is the lens clean?
            - Is the nozzle blocked?
            - Is the bed in the proper position?
        - Material retention - For the laser to remain focused over the whole part, it is important that the material being cut remain flat. Since sheets of plywood and plastics are often warped, it may be helpful to use wood screws around the perimeter to hold them flat against a piece of thick MDF. MDF does burn and leave a sticky residue on the back of plywood; it may be worth investigating other materials if the finish is critical.
        - Focus the laser using the tool stored on the shelf on the inside of the machine. If your material is warped, focus on the middle elevation, ensuring that the laser head cannot crash into the highest parts. Note that laser focus can be adjusted while a job is running.

        - Position the laser head at a corner of your cut.
    - Software
        - Open Trotec JobControl. Use the connect button to connect to the laser cutter.
        - The job that was printed should either appear in on the bed or in the sidebar. Drag the job to the proper position on the laser bed. The corners can snap to the current position of the laser head. The position of a selected job can also be adjusted by changing the xy coordinates in the toolbar. Multiple jobs can be on the laser bed at once.
        - Choose or create an appropriate material in the Material Database in Trotec JobControl. Air Assist must always be used to prevent fires and keep the lens and nozzle clean.
        - Select the job and turn on WYSIWIG mode using the button in the toolbar. Confirm that Trotec Job Control recognizes your geometry.
        - Press “Update” in the Calculation sidebar. Confirm that the times are reasonable.
        - Press the triangle button to begin the cut.
- Cutting
    - Press “Start”. Watch the laser. Put out any large fires. Cut time can be monitored in Trotec JobControl’s status bar.
- Cleanup
    - Clean up excess wood from the edges of parts with a scalpel, utility knife and/ or band saw. Punch out stuck holes with a punch or screwdriver. Many parts will not require any cleanup after cutting.
    - Remove the laser bed and sweep up any small pieces that may have fallen through.
    - Turn off the laser cutter.
- Troubleshooting
    - Parts not fully cut through - Ensure that the material is flat on the laser bed. If it is not, the height variations can defocus the laser. Consider increasing power, reducing speed or increasing number of passes.
    - Parts are severely burnt - Consider decreasing power, increasing speed or decreasing number of passes.
    - Beveled edges - Ensure that the material is flat on the laser bed. If that does not resolve the issue, the laser is likely misaligned. Ask for help if you do not know how to adjust the laser alignment; aligning the laser cutter is outside the scope of this guide.

Other Resources

- How to Build your Everything Really Really Fast by Charles Guan - An entertaining and thorough guide to mechanical design for rapid fabrication. Covers tab-and-slot construction and a lot more.

- SolidWorks Tutorials - Good introduction to the software. Introduction to SOLIDWORKS, Parts, Assemblies, Drawings, Assembly Mates and Sketch Blocks are particularly useful.
- A SolidWorks Parts Library I created for Bit Buckets that includes sketch blocks for laser-cut assemblies as well as common FRC electrical and mechanical components.
- Bit Buckets Engineering Journals - Documentation on the Bit Buckets Robotics Team projects through which these workflows and best practices were developed. In chronological order:
    - 2014-2015 Off-season Drivetrain
    - 2015 FRC Robot Part 1
    - 2015 FRC Robot Part 2
    - 2015 FRC Canburglar
    - 2016 FRC Robot
- CNC Panel Joinery Notebook by Sean Michael Ragan
- My favorite drill and tap size chart
- Some Hackaday articles:
    - How to Fail at Laser Cutting
    - Up-Close and Personal with Laser Cuts
    - How to Build Anything Using Delrin and a Laser Cutter
    - Drawbacks of Laser Cut Delrin - and How to Slip Around Them
    - How to Build Anything With Delrin and A Laser Cutter -- Advanced Tricks
- McMaster-Carr is a good vendor for hardware, tools and raw materials that provides fast shipping, but lower prices can often be found elsewhere. McMaster-Carr's online catalog, complete with CAD models of most of their products, is outstanding.