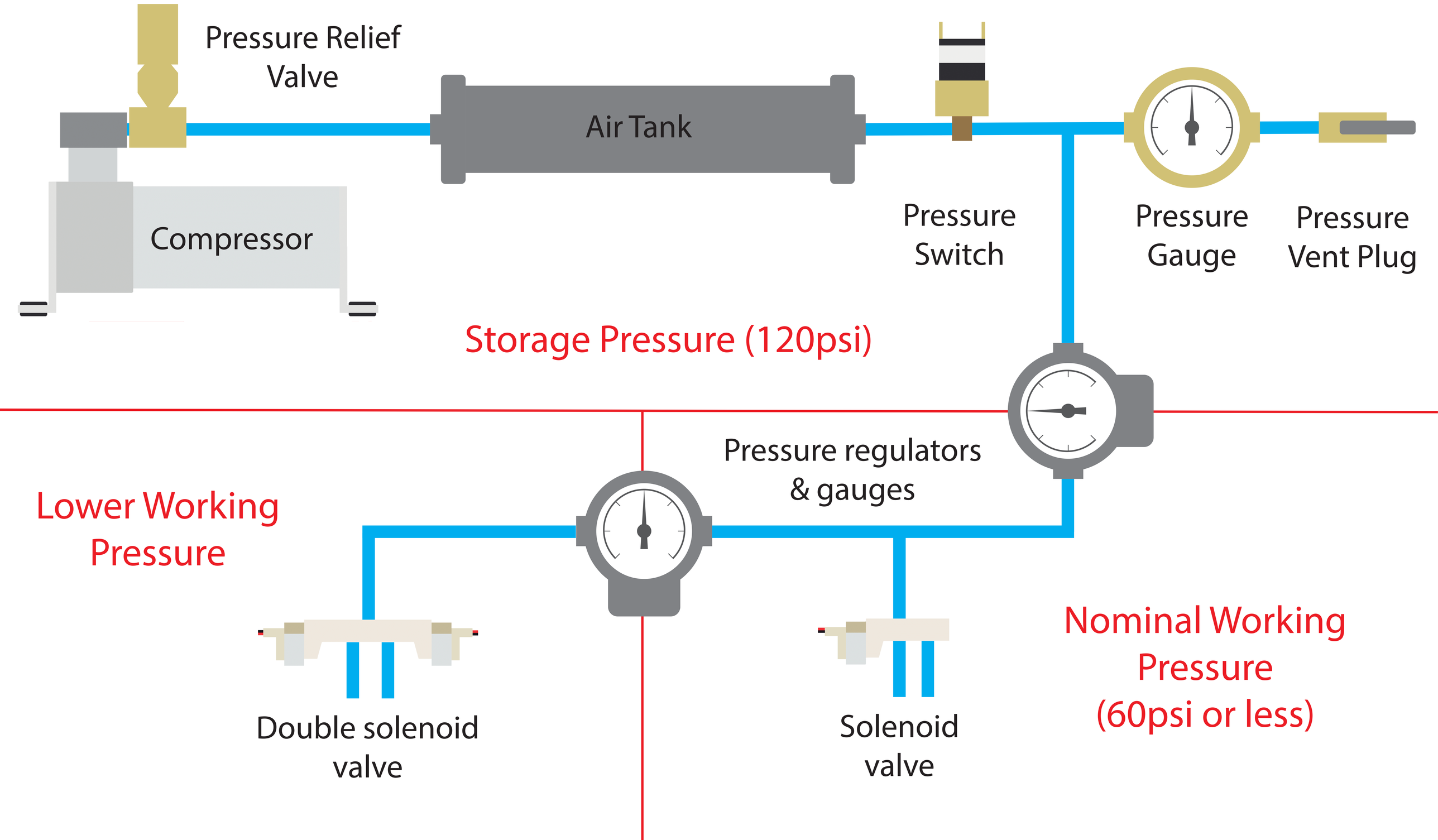FRC Pneumatic System Layout